REFERENCE GUIDE

Our History:

Established in 1987, Triad Metals International is a privately held, independent company who has grown to become one of the premier distributors of structural steel, tubing, pipe, piling and plate products in the United States and Canada. With humble beginnings in Pennsylvania, the company has expanded through the support of our customers, with 6 locations in Indiana, Virginia, Alabama and Ontario, Canada. And while we are dedicated to steel distribution, we continue to improve our offerings with processing and service solutions to meet the changing landscape and needs of our customers. With future expansions on the horizon, Triad Metals will continue to grow in order to bring the best steel solutions and service to our customers.

Our Mission:

Listen. Care. Do. More. At the core of our company's mission is the importance of strong relationships that extends from our employees to our customers and vendors alike. The need to innovate and constantly look ahead is another guiding directive of our professional team. We understand the importance of working for our customers' continued satisfaction through excellent response and commitment to provide the steel needed to meet your needs. We work hard to develop long term, mutually beneficial relationships. At Triad Metals we remain steadfast in delivering exceptional service to each and every customer, each and every day

TABLE OF CONTENTS

BEAMS ..... p. 1
- WIDE FLANGE ..... p. 3
- JUNIOR BEAMS ..... p. 13
- I-BEAMS ..... p. 14

MBQ ..... p. 19
- MBQ BAR ANGLES ..... p. 21
- MBQ STRUCTURAL ANGLES ..... p. 23
- MBQ BAR CHANNELS ..... p. 28
- MBQ STRINGER CHANNELS ..... p. 29
- MBQ STRUCTURAL CHANNELS ..... p. 30
- MBQ MISC CHANNELS ..... p. 32
- MBQ H.R. BAR FLATS ..... p. 35
- MBQ H.R. ROUNDS ..... p. 41
- MBQ H.R. SQUARES ..... p. 41
- MBQ UM PLATE ..... p. 42

PILING ..... p. 47
- H BEARING PILE ..... p. 49
- PIPE PILING ..... p. 51
- FLAT SECTION PILE ..... p. 53
- SHEET PILING ..... p. 55

PLATE ..... p. 57
- HR/HRPO, COILS, CQ-HSLA ..... p. 58
- COLD ROLLED, COILS, CQ-HSLA ..... p. 59
- HOT ROLLED, SHEET, CQ-HSLA ..... p. 60
- HOT ROLLED, PLATE, CQ-HSLA ..... p. 61
- UM PLATE, CQ-HSLA ..... p. 63
- STRIP, CQ-HSLA ..... p. 63
- CARBON STEEL PLATE ..... p. 65

TUBE/PIPE ..... p. 87
- A53 PIPE ..... p. 88
- PIPE ..... p. 89
- SQUARE TUBING ..... p. 91
- RECTANGULAR TUBING ..... p. 95

SERVICES ..... p. 105

LOCATIONS ..... p. 107

BEAMS

I - BEAM

JR. BEAM

M - BEAM

WF - BEAM

WIDE FLANGE BEAMS

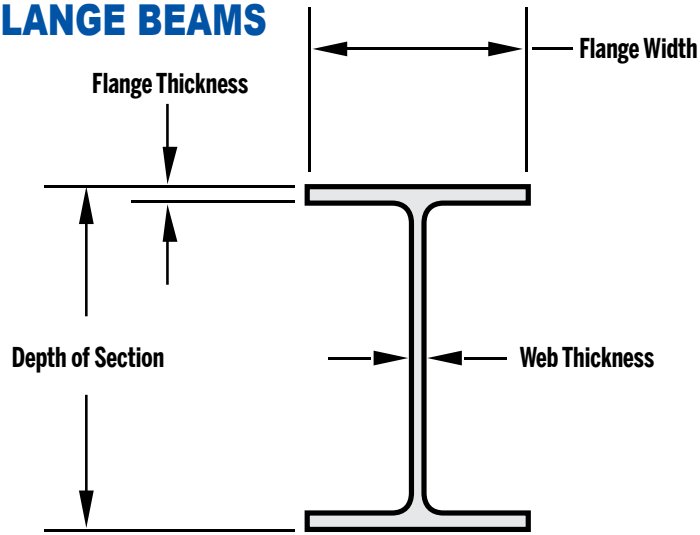

I-BEAMS

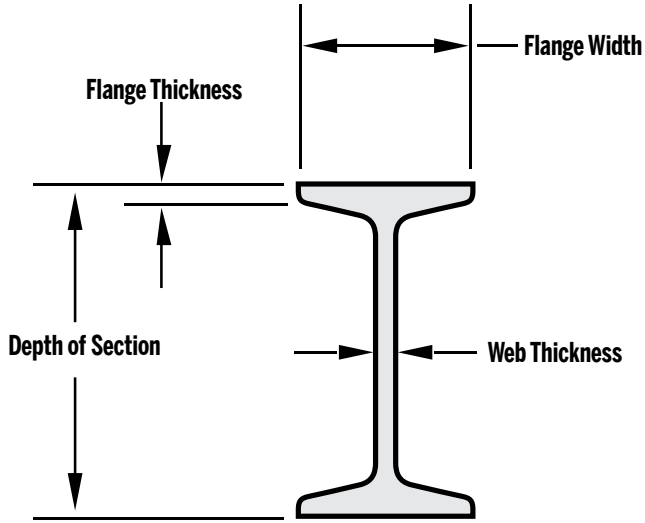

WIDE FLANGE BEAMS

SECTION NUMBER	LBS. PER FT.	DEPTH OF SECTION (IN.)	FLANGE WIDTH (IN.)	FLANGE THICKNESS (IN.)	WEB THICKNESS (IN.)
4 x 4	13	4.160	4.060	0.345	0.280
5 x 5	16	5.010	5.000	0.360	0.240
	19	5.150	5.030	0.430	0.270
6 x 4	9	5.900	3.940	0.215	0.170
	12	6.030	4.000	0.280	0.230
	16	6.280	4.030	0.405	0.260
6 x 6	15	5.990	5.990	0.260	0.230
	20	6.200	6.020	0.365	0.260
	25	6.380	6.080	0.455	0.320
8 x 4	10	7.890	3.940	0.205	0.170
	13	7.990	4.000	0.255	0.230
	15	8.110	4.015	0.315	0.245
8 x 5 1/4	18	8.140	5.250	0.330	0.230
	21	8.280	5.270	0.400	0.250
8 x 6 1/2	24	7.930	6.495	0.400	0.245
	28	8.060	6.535	0.465	0.285
8 x 8	31	8.000	7.995	0.435	0.285
	35	8.120	8.020	0.495	0.310
	40	8.250	8.070	0.560	0.360
	48	8.500	8.110	0.685	0.400
	58	8.750	8.220	0.810	0.510

WIDE FLANGE BEAMS

SECTION NUMBER	LBS. PER FT.	DEPTH OF SECTION (IN.)	FLANGE WIDTH (IN.)	FLANGE THICKNESS (IN.)	WEB THICKNESS (IN.)
8 x 8	67	9.000	8.280	0.935	0.570
10 x 4	12	9.870	3.960	0.210	0.190
	15	9.990	4.000	0.270	0.230
	17	10.110	4.010	0.330	0.240
	19	10.240	4.020	0.395	0.250
10 x 5 3/4	22	10.170	5.750	0.360	0.240
	26	10.330	5.770	0.440	0.260
	30	10.470	5.810	0.510	0.300
10 x 8	33	9.730	7.960	0.435	0.290
	39	9.920	7.985	0.530	0.315
	45	10.100	8.020	0.620	0.350
10 x 10	49	9.980	10.000	0.560	0.340
	54	10.090	10.030	0.615	0.370
	60	10.220	10.080	0.680	0.420
	68	10.400	10.130	0.770	0.470
	77	10.600	10.190	0.870	0.530
	88	10.840	10.265	0.990	0.605
	100	11.100	10.340	1.120	0.680
	112	11.360	10.415	1.250	0.755
12 x 4	14	11.910	3.970	0.225	0.200
	16	11.990	3.990	0.265	0.220
	19	12.160	4.005	0.350	0.235
	22	12.310	4.030	0.425	0.260

WIDE FLANGE BEAMS

SECTION NUMBER	LBS. PER FT.	DEPTH OF SECTION (IN.)	FLANGE WIDTH (IN.)	FLANGE THICKNESS (IN.)	WEB THICKNESS (IN.)
12 x 6 1/2	26	12.220	6.490	0.380	0.230
	30	12.340	6.520	0.440	0.260
	35	12.500	6.560	0.520	0.300
12 x 8	40	11.940	8.005	0.515	0.295
	45	12.060	8.045	0.575	0.335
	50	12.190	8.080	0.640	0.370
12 x 10	53	12.060	9.995	0.575	0.345
	58	12.190	10.010	0.640	0.360
12 x 12	65	12.120	12.000	0.605	0.390
	72	12.250	12.040	0.670	0.430
	79	12.380	12.080	0.735	0.470
	87	12.530	12.125	0.810	0.515
	96	12.710	12.160	0.900	0.550
	106	12.890	12.220	0.990	0.610
	120	13.120	12.320	1.105	0.710
	136	13.410	12.400	1.250	0.790
	152	13.710	12.480	1.400	0.870
	170	14.030	12.570	1.560	0.960
	190	14.380	12.670	1.735	1.060
14 x 5	22	13.740	5.000	0.335	0.230
	26	13.910	5.025	0.420	0.255
14 x 6 3/4	30	13.840	6.730	0.385	0.270
	34	13.980	6.745	0.455	0.285

WIDE FLANGE BEAMS

SECTION NUMBER	LBS. PER FT.	DEPTH OF SECTION (IN.)	FLANGE WIDTH (IN.)	FLANGE THICKNESS (IN.)	WEB THICKNESS (IN.)
14 x 6 3/4	38	14.100	6.770	0.515	0.310
14 x 8	43	13.660	7.995	0.530	0.305
	48	13.790	8.030	0.595	0.340
	53	13.920	8.060	0.660	0.370
14 x 10	61	13.890	9.995	0.645	0.375
	68	14.040	10.035	0.720	0.415
	74	14.170	10.070	0.785	0.450
	82	14.310	10.130	0.855	0.510
14 x 14 1/2	90	14.020	14.520	0.710	0.440
	99	14.160	14.565	0.780	0.485
	109	14.320	14.605	0.860	0.525
	120	14.480	14.670	0.940	0.590
	132	14.660	14.725	1.030	0.645
14 x 16	145	14.780	15.500	1.090	0.680
	159	14.980	15.565	1.190	0.745
	176	15.220	15.650	1.310	0.830
	193	15.480	15.710	1.440	0.890
	211	15.720	15.800	1.560	0.980
	233	16.040	15.890	1.720	1.070
	257	16.380	15.995	1.890	1.175
	283	16.740	16.110	2.070	1.290
14 x 16	311	17.120	16.230	2.260	1.410
	342	17.540	16.360	2.470	1.540

WIDE FLANGE BEAMS

SECTION NUMBER	LBS. PER FT.	DEPTH OF SECTION (IN.)	FLANGE WIDTH (IN.)	FLANGE THICKNESS (IN.)	WEB THICKNESS (IN.)
14 x 16	370	17.920	16.475	2.660	1.655
	398	18.290	16.590	2.845	1.770
	426	18.670	16.695	3.035	1.875
16 x 5 1/2	26	15.690	5.500	0.345	0.250
	31	15.880	5.525	0.440	0.275
16 x 7	36	15.860	6.985	0.430	0.295
	40	16.010	6.995	0.505	0.305
	45	16.130	7.035	0.565	0.345
	50	16.260	7.070	0.630	0.380
	57	16.430	7.120	0.715	0.430
16 x 10 1/4	67	16.330	10.235	0.665	0.395
	77	16.520	10.295	0.760	0.455
	89	16.750	10.365	0.875	0.525
	100	16.970	10.425	0.985	0.585
18 x 6	35	17.700	6.000	0.425	0.300
	40	17.900	6.015	0.525	0.315
	46	18.060	6.060	0.605	0.360
18 x 7 1/2	41	17.700	7.450	0.430	0.319
	45	17.860	7.480	0.500	0.340
	50	17.990	7.495	0.570	0.355
	55	18.110	7.530	0.630	0.390
	60	18.240	7.555	0.695	0.415
	65	18.350	7.590	0.750	0.450

WIDE FLANGE BEAMS

SECTION NUMBER	LBS. PER FT.	DEPTH OF SECTION (IN.)	FLANGE WIDTH (IN.)	FLANGE THICKNESS (IN.)	WEB THICKNESS (IN.)
18 x 7 1/2	71	18.470	7.635	0.810	0.495
18 x 11	76	18.210	11.035	0.680	0.425
	86	18.390	11.090	0.770	0.480
	97	18.590	11.145	0.870	0.535
	106	18.730	11.200	0.940	0.590
	119	18.970	11.265	1.060	0.655
	130	19.250	11.160	1.200	0.670
	143	19.490	11.220	1.320	0.730
	158	19.720	11.300	1.440	0.810
	175	20.040	11.375	1.590	0.890
	192	20.350	11.455	1.750	0.960
	211	20.670	11.555	1.910	1.060
	234	21.060	11.650	2.110	1.160
	258	21.460	11.770	2.300	1.280
	283	21.850	11.890	2.500	1.400
	311	22.320	12.005	2.740	1.520
21 x 6 1/2	44	20.660	6.500	0.450	0.350
	50	20.830	6.530	0.535	0.380
	57	21.060	6.555	0.650	0.405
21 x 8 1/4	48	20.620	8.140	0.430	0.350
	55	20.800	8.220	0.522	0.375
	62	20.990	8.240	0.615	0.400
	68	21.130	8.270	0.685	0.430
	73	21.240	8.295	0.740	0.455
	83	21.430	8.355	0.835	0.515

WIDE FLANGE BEAMS

SECTION NUMBER	LBS. PER FT.	DEPTH OF SECTION (IN.)	FLANGE WIDTH (IN.)	FLANGE THICKNESS (IN.)	WEB THICKNESS (IN.)
21 x 8 1/4	93	21.620	8.420	0.930	0.580
21 x 12 1/4	101	21.360	12.290	0.800	0.500
	111	21.510	12.340	0.875	0.550
	122	21.680	12.390	0.960	0.600
	132	21.830	12.440	1.035	0.650
	147	22.060	12.510	1.150	0.720
24 x 7	55	23.570	7.005	0.505	0.395
	62	23.740	7.040	0.590	0.430
24 x 9	56	23.460	8.898	0.461	0.355
	61	23.540	8.937	0.500	0.380
	68	23.730	8.965	0.585	0.415
	76	23.920	8.990	0.680	0.440
	84	24.100	9.020	0.770	0.470
	94	24.310	9.065	0.875	0.515
	103	24.530	9.000	0.980	0.550
24 x 12 3/4	104	24.060	12.750	0.750	0.500
	117	24.260	12.800	0.850	0.550
	131	24.480	12.855	0.960	0.605
	146	24.740	12.900	1.090	0.650
	162	25.000	12.955	1.220	0.705
	176	25.240	12.890	1.340	0.750
	192	25.470	12.950	1.460	0.810
27 x 10	84	26.710	9.960	0.640	0.460

WIDE FLANGE BEAMS

SECTION NUMBER	LBS. PER FT.	DEPTH OF SECTION (IN.)	FLANGE WIDTH (IN.)	FLANGE THICKNESS (IN.)	WEB THICKNESS (IN.)
27 x 10	94	26.920	9.990	0.745	0.490
	102	27.090	10.015	0.830	0.515
	114	27.290	10.070	0.930	0.570
	129	27.630	10.010	1.100	0.610
27 x 14	146	27.380	13.965	0.975	0.605
	161	27.590	14.020	1.080	0.660
	178	27.810	14.085	1.190	0.725
30 x 10 1/2	90	29.530	10.400	0.610	0.470
	99	29.650	10.450	0.670	0.520
	108	29.830	10.475	0.760	0.545
	116	30.010	10.495	0.850	0.565
	124	30.170	10.515	0.930	0.585
	132	30.310	10.545	1.000	0.615
	148	30.670	10.480	1.180	0.650
30 x 15	173	30.440	14.985	1.065	0.655
	191	30.680	15.040	1.185	0.710
	211	30.940	15.105	1.315	0.775
33 x 11 1/2	118	32.860	11.480	0.740	0.550
	130	33.090	11.510	0.855	0.580
	141	33.300	11.535	0.960	0.605
	152	33.490	11.565	1.055	0.635
	169	33.820	11.500	1.220	0.670
33 x 15 3/4	201	33.680	15.745	1.150	0.715

WIDE FLANGE BEAMS

SECTION NUMBER	LBS. PER FT.	DEPTH OF SECTION (IN.)	FLANGE WIDTH (IN.)	FLANGE THICKNESS (IN.)	WEB THICKNESS (IN.)
33 x 15 3/4	221	33.930	15.805	1.275	0.775
	241	34.180	15.860	1.400	0.830
36 x 12	135	35.550	11.950	0.790	0.600
	150	35.850	11.975	0.940	0.625
	160	36.010	12.000	1.020	0.650
	170	36.170	12.030	1.100	0.680
	182	36.330	12.075	1.180	0.725
	194	36.490	12.115	1.260	0.765
	210	36.690	12.180	1.360	0.830
	232	37.120	12.120	1.570	0.870
	256	37.430	12.215	1.730	0.960
36 x 16 1/2	231	36.490	16.470	1.260	0.760
	247	36.670	16.510	1.350	0.800
	262	36.850	16.550	1.440	0.840
	282	37.110	16.595	1.570	0.885
	302	37.330	16.655	1.680	0.945

WIDE FLANGE BEAMS

SECTION NUMBER	LBS. PER FT.	DEPTH OF SECTION (IN.)	FLANGE WIDTH (IN.)	FLANGE THICKNESS (IN.)	WEB THICKNESS (IN.)
40 x 16	431	41.26	16.220	2.360	1.340
	397	40.95	16.120	2.200	1.220
	372	40.63	16.065	2.045	1.160
	362	40.55	16.020	2.010	1.120
	324	40.16	15.910	1.810	1.000
	297	39.84	15.825	1.650	0.930
	277	39.69	15.830	1.575	0.830
	249	39.38	15.750	1.420	0.750
	215	38.98	15.750	1.220	0.650
	199	38.67	15.750	1.065	0.650
40 x 12	327	40.79	12.130	2.130	1.180
	294	40.39	12.010	1.930	1.060
	278	40.16	11.970	1.810	1.025
	264	40.00	11.930	1.730	0.960
	235	39.69	11.890	1.575	0.830
	211	39.37	11.810	1.415	0.750
	183	38.98	11.810	1.200	0.650
	167	38.59	11.810	1.0.25	0.650
	149	38.20	11.810	0.830	0.630

JUNIOR BEAMS

SECTION NUMBER	LBS. PER FT.	DEPTH OF SECTION (IN.)	FLANGE WIDTH (IN.)	WEB THICKNESS (IN.)
6	4.4	6	1.84	0.114
8	6.5	8	2.28	0.135
10	9.0	10	2.69	0.157
12	11.8	12	3.07	0.177

I-BEAMS

SECTION NUMBER	LBS. PER FT.	DEPTH OF SECTION (IN.)	FLANGE WIDTH (IN.)	FLANGE THICKNESS (IN.)	WEB THICKNESS (IN.)
I3	5.7	3.000	2.375	0.250	0.188
	7.5	3.000	2.500	0.250	0.375
I4	7.7	4.000	2.625	0.313	0.188
	9.5	4.000	2.750	0.313	0.313
I5	10	5.000	3.000	0.313	0.188
I6	12.5	6.000	3.375	0.375	0.250
	17.25	6.000	3.625	0.375	0.438
I7	15.3	7.000	3.625	0.375	0.250
I8	18.4	8.000	4.000	0.438	0.250
	23	8.000	4.125	0.438	0.438
I10	25.4	10.000	4.625	0.500	0.313
	35	10.000	5.000	0.500	0.625
I12	31.8	12.000	5.000	0.563	0.375
	35	12.000	5.125	0.563	0.438
	40.8	12.000	5.250	0.688	0.438
	50	12.000	5.500	0.688	0.688
I15	42.9	15.000	5.500	0.625	0.438
	50	15.000	5.625	0.625	0.563

I-BEAMS

SECTION NUMBER	LBS. PER FT.	DEPTH OF SECTION (IN.)	FLANGE WIDTH (IN.)	FLANGE THICKNESS (IN.)	WEB THICKNESS (IN.)
I18	54.7	18.000	6.000	0.688	0.438
	70	18.000	6.250	0.688	0.688
I20	66	20.000	6.250	0.813	0.500
	75	20.000	6.375	0.813	0.625
	86	20.000	7.000	0.938	0.688
I20	96	20.000	7.250	0.938	0.813
I24	80	24.000	7.000	0.875	0.500
	100	24.000	7.250	0.875	0.750
	106	24.000	7.875	1.063	0.625
	121	24.000	8.000	1.063	0.813

BEAMS

- Stocked in 5 foot increments, from 3" through 44" Jumbo, these structural sections come in a variety of dimensions including Wide Flange, I-beam, Jr Beam, H-Pile and more.
- Common Grades: ASTM A992, A572, A709, A36

Industry Standards

All products are produced to the listed standards except as noted

ASTM A36 - Standard specification for carbon structural steel. This specification covers shapes of structural quality for use in riveted, bolted, or welded construction of bridges and buildings, and for general structural purposes.
ASTM A572 - Standard specification for high-strength low-alloy structural steel. This specification covers five grades of high-strength low-alloy shapes intended for riveted, bolted, or welded construction of bridges, or for other construction applications.
ASTM A588 - Standard specification for high-strength low-alloy structural steel. This specification covers shapes for welded, riveted, or bolted construction but intended primarilyfor use in welded bridges and buildings where savings in weight or added durability is important. The atmospheric corrosion resistance of this steel in most environments is substantially better than that of carbon steels with or without copper addition.
ASTM A709 - Standard specification for carbon and high-strength low-alloy shapes. This specification covers shapes, and bars intended for use in bridges. Seven grades are available in four yield strengths.
ASTM A992 - Standard specification for steel for structural shapes for use in building framing. This specification covers rolled shapes for use in building framing or bridges, or for general structural purposes.

BEAMS

Permitted Variation in Straightness in Inches for W and HP Shapes

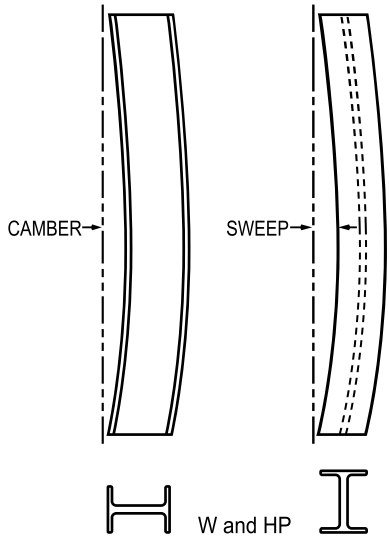

Camber and Sweep (inches)
= 1/8 x (number of feet of
total length/10)[A]

When certain sections[B] with a flange width approximately equal to depth are specified in the order for use as columns, camber and sweep (inches):
Lengths 45 ft and under = 1/8 x (number of feet of total length/10) but not over 3/8
Lengths over 45 ft = [1/8 x ([number of feet of total lenght - 45]/10)]

A) For sections with flange width less than 6 in. permitted variation in sweep (inches) = 1/8 x (number of feet of total length/5)

B) Applies only to:
8 in. deep sections 31 lb/ft and heavier,
10 in. deep sections 49 lb/ft and heavier,
12 in. deep sections 65 lb/ft and heavier,
14 in. deep sections 90 lb/ft and heavier,
16 in. deep sections 88 lb/ft and heavier, and
18 in. deep sections 135 lb/ft and heavier.

MBQ

ANGLES

CHANNELS

BAR CHANNELS

MISC. CHANNELS

UM PLATE

FLATS

ROUNDS

SQUARES

HANDRAIL, TEES, REBAR

MBQ ANGLES

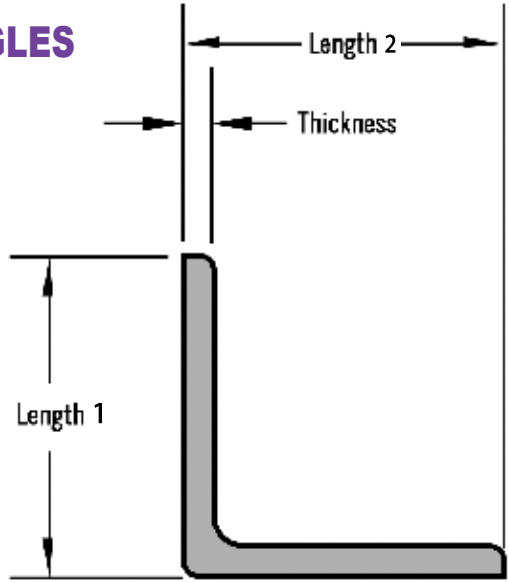

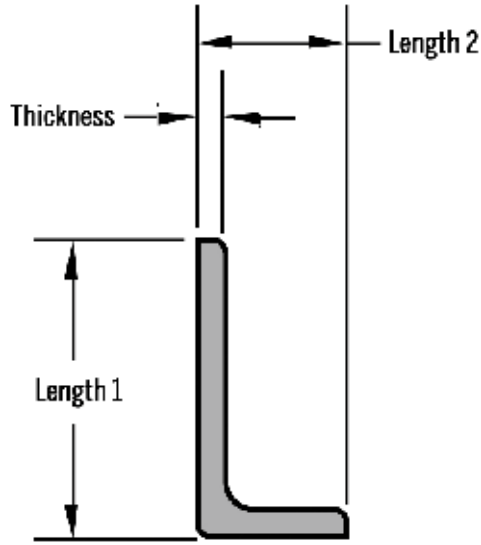

MBQ BAR ANGLES

SIZE LENGTH 1 (IN.)		SIZE LENGTH 2 (IN.)		SIZE THICKNESS (IN.)	LBS. PER FT.
1/2	x	1/2	x	1/8	0.38
5/8	x	5/8	x	1/8	0.48
3/4	x	3/4	x	1/8	0.59
1	x	1	x	1/8	0.80
			x	3/16	1.16
			x	1/4	1.49
1-1/4	x	1-1/4	x	1/8	1.01
			x	3/16	1.48
			x	1/4	1.92
1-1/2	x	1-1/2	x	1/8	1.23
			x	3/16	1.80
			x	1/4	2.34
1-3/4	x	1-3/4	x	1/8	1.44
			x	3/16	2.12
			x	1/4	2.77
2	x	1-1/2	x	1/8	1.44
			x	3/16	2.12
			x	1/4	2.77
2	x	2	x	1/8	1.65
			x	3/16	2.44
			x	1/4	3.19

MBQ BAR ANGLES

SIZE LENGTH 1 (IN.)		SIZE LENGTH 2 (IN.)		SIZE THICKNESS (IN.)	LBS. PER FT.
2	x	2	x	5/16	3.92
			x	3/8	4.70
2-1/2	x	1-1/2	x	3/16	2.44
			x	1/4	3.19
			x	5/16	3.92
2-1/2	x	2	x	3/16	2.75
			x	1/4	3.62
			x	5/16	4.50
			x	3/8	5.30
2-1/2	x	2-1/2	x	3/16	3.07
			x	1/4	4.10
			x	5/16	5.00
			x	3/8	5.90
			x	1/2	7.70

MBQ STRUCTURAL ANGLES

SIZE LENGTH 1 (IN.)		SIZE LENGTH 2 (IN.)		SIZE THICKNESS (IN.)	LBS. PER FT.
3	x	2	x	3/16	3.1
			x	1/4	4.1
			x	5/16	5.0
			x	3/8	5.9
			x	1/2	7.7
3	x	2-1/2	x	3/16	3.39
			x	1/4	4.5
			x	5/16	5.6
			x	3/8	6.6
3	x	3	x	3/16	3.7
			x	1/4	4.9
			x	5/16	6.1
			x	3/8	7.2
			x	1/2	9.4
3-1/2	x	2-1/2	x	1/4	4.9
			x	5/16	6.1
			x	3/8	7.2
			x	1/2	9.4
3-1/2	x	3	x	1/4	5.4
			x	5/16	6.6
			x	3/8	7.9
			x	1/2	10.2

MBQ STRUCTURAL ANGLES

SIZE LENGTH 1 (IN.)		SIZE LENGTH 2 (IN.)		SIZE THICKNESS (IN.)	LBS. PER FT.
3-1/2	x	3-1/2	x	1/4	5.8
			x	5/16	7.2
			x	3/8	8.5
			x	1/2	11.1
4	x	3	x	1/4	5.8
			x	5/16	7.2
			x	3/8	8.5
			x	1/2	11.1
4	x	3-1/2	x	1/4	6.2
			x	5/16	7.7
			x	3/8	9.1
			x	1/2	11.9
4	x	4	x	1/4	6.6
			x	5/16	8.2
			x	3/8	9.8
			x	1/2	12.8
			x	5/8	15.7
			x	3/4	18.5
5	x	3	x	1/4	6.6
			x	5/16	8.2
			x	3/8	9.8
			x	1/2	12.8

MBQ STRUCTURAL ANGLES

SIZE LENGTH 1 (IN.)		SIZE LENGTH 2 (IN.)		SIZE THICKNESS (IN.)	LBS. PER FT.
5	x	3-1/2	x	1/4	7.0
			x	5/16	8.7
			x	3/8	10.4
			x	1/2	13.6
			x	5/8	16.8
			x	3/4	19.8
5	x	5	x	5/16	10.3
			x	3/8	12.3
			x	1/2	16.2
			x	5/8	20.0
			x	3/4	23.6
6	x	3-1/2	x	5/16	9.8
			x	3/8	11.7
			x	1/2	15.3
6	x	4	x	5/16	10.3
			x	3/8	12.3
			x	1/2	16.2
			x	5/8	20.0
			x	3/4	23.6
6	x	6	x	5/16	12.4
			x	3/8	14.9
			x	1/2	19.6

MBQ STRUCTURAL ANGLES

SIZE LENGTH 1 (IN.)		SIZE LENGTH 2 (IN.)		SIZE THICKNESS (IN.)	LBS. PER FT.
6	x	6	x	5/8	24.2
			x	3/4	28.7
			x	1	37.4
7	x	4	x	3/8	13.6
			x	1/2	17.9
			x	3/4	26.2
8	x	4	x	1/2	19.6
			x	3/4	28.7
			x	1	37.4
8	x	6	x	1/2	23.0
			x	3/4	33.8
			x	1	44.2
8	x	8	x	1/2	26.4
			x	3/4	38.9
			x	1	51.0
			x	1-1/8	56.9

MBQ CHANNEL DIAGRAM

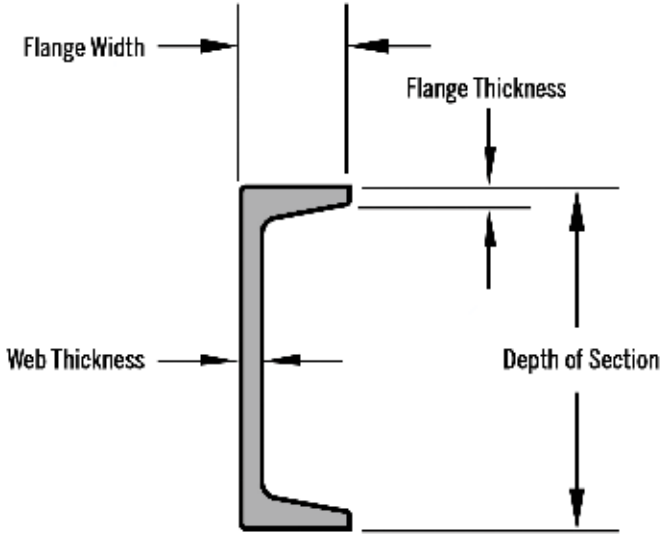

MBQ BAR CHANNELS

SECTION DEPTH (IN.)	FLANGE WIDTH (IN.)	WEB THICKNESS (IN.)	LBS. PER FT.
1	3/8	1/8	0.68
	1/2	1/8	0.88
1-1/4	1/2	1/8	1.01
1-1/2	1/2	1/8	1.12
	9/16	3/16	1.44
2	1/2	1/8	1.33
	9/16	3/16	1.76
	5/8	1/4	2.18
	1	1/8	1.78
	1	3/16	2.57
2-1/2	5/8	3/16	2.27

MBQ STRINGER CHANNELS

SECTION DEPTH (IN.)	FLANGE WIDTH (IN.)	WEB THICKNESS (IN.)	LBS. PER FT.
8	1.875	0.180	8.5
10	1.125	0.150	6.5
	1.500	0.170	8.4
12	1.500	0.190	10.6

MBQ STRUCTURAL CHANNELS

SECTION NUMBER	LBS. PER FT.	DEPTH OF SECTION (IN.)	FLANGE WIDTH (IN.)	FLANGE THICKNESS (IN.)	WEB THICKNESS (IN.)
C3	3.5	3	1-3/8	1/4	1/8
	4.1	3	1-3/8	1/4	3/16
	5	3	1-1/2	1/4	1/4
	6	3	1-9/16	1/4	5/16
C4	4.5	4	1-5/8	5/16	1/8
	5.4	4	1-5/8	5/16	3/16
	6.25	4	1-5/8	1/4	1/4
	7.25	4	1-3/4	5/16	5/16
C5	6.7	5	1-3/4	5/16	3/16
	9	5	1-7/8	5/16	5/16
C6	8.2	6	1-7/8	5/16	3/16
	10.5	6	2	5/16	5/16
	13	6	2-1/8	5/16	7/16
C7	9.8	7	2-1/8	3/8	3/16
	12.25	7	2-1/4	3/8	5/16
	14.75	7	2-3/8	7/16	7/16
C8	11.5	8	2-1/4	3/8	1/4
	13.75	8	2-3/8	3/8	5/16
	18.75	8	2-1/2	3/8	1/2
C9	13.4	9	2-3/8	7/16	1/4
	15	9	2-1/2	7/16	5/16
	20	9	2-5/8	1/2	1/2

MBQ STRUCTURAL CHANNELS

SECTION NUMBER	LBS. PER FT.	DEPTH OF SECTION (IN.)	FLANGE WIDTH (IN.)	FLANGE THICKNESS (IN.)	WEB THICKNESS (IN.)
C10	15.3	10	2-5/8	7/16	1/4
	20	10	2-3/4	7/16	3/8
	25	10	2-7/8	7/16	1/2
	30	10	3	7/16	11/16
C12	20.7	12	3	1/2	5/16
	25	12	3	1/2	3/8
	30	12	3-1/8	1/2	1/2
C15	33.9	15	3-3/8	5/8	3/8
	40	15	3-1/2	5/8	1/2
	50	15	3-3/4	5/8	11/16

MBQ MISC CHANNELS

SECTION NUMBER	LBS. PER FT.	DEPTH OF SECTION (IN.)	FLANGE WIDTH (IN.)	FLANGE THICKNESS (IN.)	WEB THICKNESS (IN.)
MC3	7.1	3	2	3/8	5/16
MC4	13.8	4	2-1/2	1/2	1/2
MC6	12.0	6	2-1/2	3/8	5/16
MC6	15.1	6	3	1/2	5/16
	16.3	6	3	1/2	3/8
MC6	15.3	6	3-1/2	3/8	5/16
MC6	18.0	6	3-1/2	1/2	3/8
MC7	19.1	7	3-1/2	1/2	3/8
	22.7	7	3-5/8	1/2	1/2
MC8	18.7	8	3	1/2	3/8
	20.0	8	3	1/2	3/8
MC8	21.4	8	3-1/2	1/2	3/8
	22.8	8	3-1/2	1/2	7/16
MC9	23.9	9	3-1/2	9/16	3/8
	25.4	9	3-1/2	9/16	7/16
MC10	22.0	10	3-3/8	9/16	5/16
	25.0	10	3-3/8	9/16	3/8

MBQ MISC CHANNELS

SECTION NUMBER	LBS. PER FT.	DEPTH OF SECTION (IN.)	FLANGE WIDTH (IN.)	FLANGE THICKNESS (IN.)	WEB THICKNESS (IN.)
MC10	28.5	10	4	9/16	7/16
	33.6	10	4-1/8	9/16	9/16
	41.1	10	4-3/8	9/16	13/16
MC12	31.0	12	3-5/8	11/16	3/8
	35.0	12	3-5/8	11/16	7/16
MC12	40.0	12	3-7/8	11/16	9/16
	50.0	12	4-1/8	11/16	13/16
MC13	31.8	13	4	5/8	3/8
	35.0	13	4-1/8	5/8	7/16
	40.0	13	4-1/8	5/8	9/16
	50.0	13	4-3/8	5/8	13/16
MC18	42.7	18	4	5/8	7/16
	45.8	18	4	5/8	1/2
	51.9	18	4-1/8	5/8	5/8
	58.0	18	4-1/8	5/8	11/16

MBQ H.R. BAR

ROUND

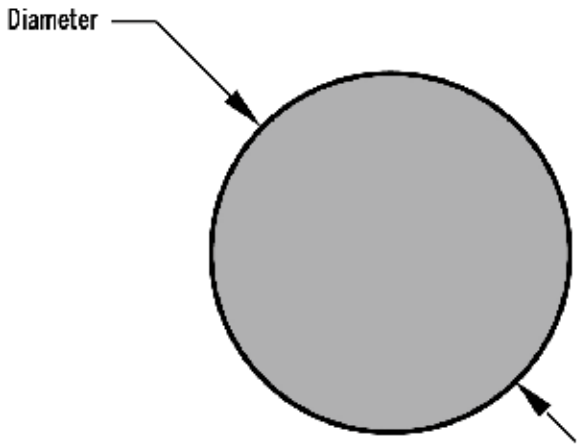

SQUARE

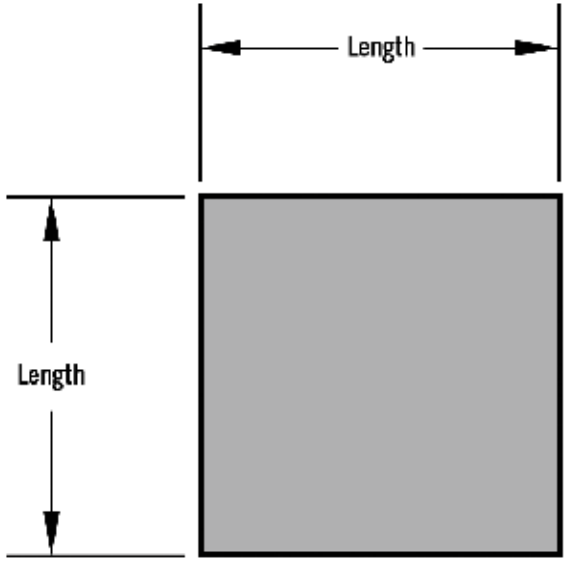

MBQ H.R. BAR FLATS

THICKNESS (IN.)	WIDTH (IN.)	LBS. PER FT.
1/4	1/2	0.425
	3/4	0.638
	1	0.850
	1-1/4	1.06
	1-1/2	1.28
	1-3/4	1.49
	2	1.70
	2-1/4	1.91
	2-1/2	2.13
	2-3/4	2.34
	3	2.55
	3-1/2	2.98
	4	3.40
	4-1/2	3.83
	5	4.25
	6	5.10
	7	5.95
	7-1/2	6.38
	8	6.80
5/16	1	1.06
	1-1/4	1.33
	1-1/2	1.59
	2	2.13
	2-1/2	2.66

MBQ H.R. BAR FLATS

THICKNESS (IN.)	WIDTH (IN.)	LBS. PER FT.
5/16	3	3.16
	4	4.25
	5	5.31
	5-1/2	5.84
	6	6.38
	7	7.44
	8	8.50
3/8	3/4	0.956
	1	1.28
	1-1/4	1.59
	1-1/2	1.91
	1-3/4	2.23
	2	2.55
	2-1/2	3.19
	3	3.83
	3-1/2	4.46
	4	5.10
	4-1/2	5.74
	5	6.38
	5-1/2	7.01
	6	7.65
	6-1/2	8.30
	7	8.93
	7-1/2	9.56

MBQ H.R. BAR FLATS

THICKNESS (IN.)	WIDTH (IN.)	LBS. PER FT.
3/8	8	10.20
1/2	3/4	1.28
	1	1.70
	1-1/4	2.13
	1-1/2	2.55
	1-3/4	2.98
	2	3.40
	2-1/4	3.83
	2-1/2	4.25
	3	5.10
	3-1/2	5.95
	4	6.80
	4-1/2	7.65
	4-3/4	8.08
	5	8.50
	5-1/2	9.35
	6	10.20
	7	11.90
	7-1/2	12.75
	8	13.60
5/8	1-1/4	2.66
	1-1/2	3.19
	1-3/4	3.72

MBQ H.R. BAR FLATS

THICKNESS (IN.)	WIDTH (IN.)	LBS. PER FT.
5/8	2	4.25
	2-1/2	5.31
	3	6.38
	4	8.50
	4-1/2	9.56
	5	10.63
	5-1/2	11.69
	6	12.75
	7	14.88
	8	17.00
3/4	1	2.55
	1-1/2	3.83
	2	5.10
	2-1/4	5.74
	2-1/2	6.38
	3	7.65
	3-1/2	8.93
	4	10.20
	4-1/2	11.48
	5	12.75
	5-1/2	14.03
	6	15.30
	7	17.85
	8	20.40

MBQ H.R. BAR FLATS

THICKNESS (IN.)	WIDTH (IN.)	LBS. PER FT.
7/8	2	5.95
1	1-1/4	4.25
	1-1/2	5.10
	2	6.80
	2-1/2	8.50
	3	10.20
	3-1/2	11.90
	4	13.60
	4-1/2	15.30
	5	17.00
	5-1/2	18.70
	6	20.40
	7	23.80
	8	27.20
1-1/8	8	30.60
1-1/4	2-1/2	10.63
	3	12.75
	4	17.00
	6	25.50
	8	34.00
1-1/2	2	10.20

MBQ H.R. BAR FLATS

THICKNESS (IN.)	WIDTH (IN.)	LBS. PER FT.
1-1/2	3	15.30
	4	20.40
	4-1/2	22.95
	5	25.50
	6	30.60
	8	40.80
1-3/4	3	17.85
	4	23.80
	8	47.60
2	3	20.40
	4	27.20
	5	34.00
	8	54.40
2-1/2	3-1/2	29.75
	5	42.50
	6	51.00

MBQ H.R. ROUNDS

DIAMETER (IN.)	LBS. PER FT.
3/16	0.0939
1/4	0.1669
5/16	0.2608
3/8	0.3755
7/16	0.5111
1/2	0.6676
9/16	0.8449
5/8	1.0431
11/16	1.2622
3/4	1.5021
7/8	2.0445
1	2.6704
1-1/8	3.3797
1-1/4	4.1724
1-3/8	5.0486
1-1/2	6.0083
1-3/4	8.1780
2	10.6814
2-1/4	13.5187
2-1/2	16.6898
3	24.0330
3-1/2	32.7120
4	42.7260

MBQ H.R. SQUARES

DIAMETER (IN.)	LBS. PER FT.
3/8	0.478
7/16	0.651
1/2	0.850
5/8	1.33
3/4	1.91
7/8	2.60
1	3.40
1-1/4	5.31
1-1/2	7.65
1-3/4	10.41
2	13.60
4	54.45

MBQ UM PLATE

WIDTH (IN.)	THICKNESS (IN.)	LBS. PER FT.
9	5/16	9.58
	3/8	11.49
	1/2	15.31
	5/8	19.14
	3/4	22.97
	1	30.63
10	1/4	8.51
	5/16	10.64
	3/8	12.76
	1/2	17.02
	5/8	21.27
	3/4	25.52
	1	34.03
	1-1/4	42.54
	1-1/2	51.05
11	1/4	9.35
	5/16	11.70
	3/8	14.04
	1/2	18.72
	5/8	23.40
	3/4	28.08
	1	37.44
12	1/4	10.21
	5/16	12.76
	3/8	15.31
	1/2	20.42

MBQ UM PLATE

WIDTH (IN.)	THICKNESS (IN.)	LBS. PER FT.
12	5/8	25.52
	3/4	30.63
	1	40.84
	1-1/4	51.05
	1-1/2	61.26
13	3/8	16.59
	1/2	22.13
14	3/4	35.73
	1	47.64
15	3/8	19.14
18	3/8	22.97

MBQ

Industry Standards

All products are produced to the listed standards except as noted

Our Merchant Bar products are comprised of Hot Rolled Carbon in a number of sub-categories of shapes. We offer many different sizes, lengths and specifications for Merchant Bar. Structural steel channel can be used for many different applications. Some examples can be seen in the manufacturing of buildings, residential and non-residential construction, tractor trailers, gym equipment, racks, conveyors, barges and ship-building and an infinite number of OEM parts.

• Merchant Bar Quality steel shapes and sizes offers unlimited amounts of applications and Triad Metals is your source for anything you need in this category of steel.

• Angles: Angles have an L-shaped cross section that is used in many structural and OEM applications

• Channels: This “C” shaped section has unlimited uses, from the small bar channels to the large structural sizes, and MC Channels

• HR Bars: Offering shapes including Flats, Rounds, Squares, Handrail, and more

• UM Plate: We stock all large section flats, commonly referred to as UM plate

• Common Grades: ASTM A36, A529GR50, A36/572gr50, A709G36, A588, 44W, GR50, GR55, M1022, M1044

Merchant Bar Quality - A group of commodity steel shapes that consist of rounds, squares, flats, and strips, to which fabricators, steel service centers and manufacturers cut, bend and shape into products. Merchant products require more specialized processing than reinforcing bar.

M1020 - A low carbon, general purpose, merchant quality steel. Suitable for forming and welding.

M1044 - Medium carbon bars that are used where greater strength is required. Due to higher carbon content this grade is easily heat treatable but does not weld easily.

ASTM A36 - Standard specification for carbon structural steel. This specification covers shapes of structural quality for use in riveted, bolted, or welded construction of bridges and buildings, and for general structural purposes as well as OEMs.

ASTM A572 - Standard specification for high-strength low-alloy structural steel. This specification covers five grades of high-strength low-alloy shapes intended for riveted, bolted, or welded construction of bridges, or for other construction applications.

ASTM A588 - Standard specification for high-strength low-alloy structural steel. This specification covers shapes for welded, riveted, or bolted construction but intended primarily for use in welded bridges and buildings where savings in weight or added durability is important. The atmospheric corrosion resistance of this steel in most environments is substantially better than that of carbon steels with or without copper addition.

ASTM A709 - Standard specification for carbon and high-strength low-alloy shapes. This specification covers shapes, and bars intended for use in bridges. Seven grades are available in four yield strengths.

ASTM A992 - Standard specification for steel for structural shapes for use in building framing. This specification covers rolled shapes for use in building framing or bridges, or for general structural purposes.

PILING

H PILE

SHEET PILE

PIPE PILaE

PILING

H BEARING PILE

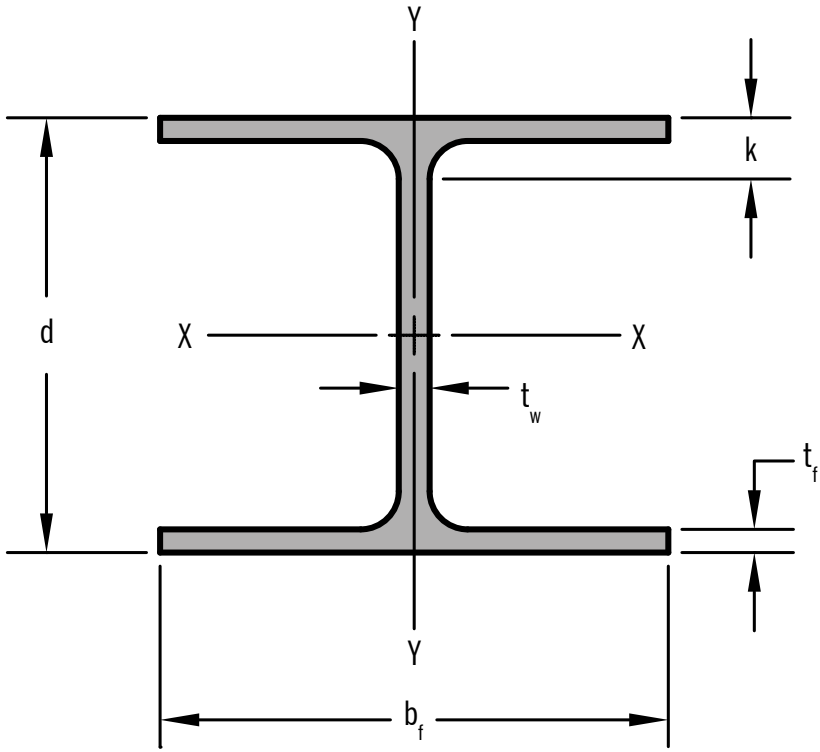

Available Grades
- A572 Gr 50
- A588
- A690 Marine Grade

Accessories
- H-Bearing Pile hard Bite Points
- Splicers

Coatings
- Galvanizing per ASTM 123
- Epoxy Paint

H BEARING PILE

SECTION	LBS. PER FT.	AREA - A (IN.^{2})	DEPTH - D (IN.)	FLANGE WIDTH - Bf (IN.)	FLANGE THICKNESS - Tf (IN.)	WEB THICKNESS - Tw (IN.)	WEB THICKNESS - Tw/2 (IN.)	DISTANCE - K (IN.)	DISTANCE - K[1] (IN.)	ELASTIC PROPERTIES X-X AXIS - I_X (IN.^{4})	ELASTIC PROPERTIES X-X AXIS - S_X (IN.^{3})	ELASTIC PROPERTIES X-X AXIS - R_X (IN.)	ELASTIC PROPERTIES Y-Y AXIS - I_Y (IN.^{4})	ELASTIC PROPERTIES Y-Y AXIS - S_Y (IN.^{3})	ELASTIC PROPERTIES Y-Y AXIS - R_Y (IN.)	SURFACE AREA PER LINEAR FT - FT^2/FT
HP14	117	34.4	14.21	14.885	0.805	0.805	0.403	1.5000	1.0625	1220	172	5.96	443	59.5	3.59	7.10
	102	30.0	14.01	14.785	0.705	0.705	0.353	1.3750	1.0000	1050	150	5.92	380	51.4	3.56	7.05
	89	26.1	13.83	14.695	0.615	0.615	0.308	1.3125	0.9375	904	131	5.88	326	44.3	3.53	7.00
	73	21.4	13.61	14.585	0.505	0.505	0.253	1.1875	0.8750	729	107	5.84	261	35.8	3.49	6.95
HP12	84	24.6	12.28	12.295	0.685	0.685	0.343	1.3750	1.0000	650	106	5.14	213	34.6	2.94	5.93
	74	21.8	12.13	12.215	0.610	0.605	0.303	1.3125	0.9375	569	93.8	5.11	186	30.4	2.92	5.89
	63	18.4	11.94	12.125	0.515	0.515	0.258	1.2500	0.8750	472	79.1	5.06	153	25.3	2.88	5.85
	53	15.5	11.78	12.045	0.435	0.435	0.218	1.1250	0.8750	393	66.8	5.03	127	21.1	2.86	5.81
HP10	57	16.8	9.99	10.225	0.565	0.565	0.283	1.1875	0.8125	294	58.8	4.18	101	19.7	2.45	4.89
	42	12.4	9.70	10.075	0.420	0.415	0.208	1.0625	0.7500	210	43.4	4.13	71.7	14.2	2.41	4.82
HP8	36	10.6	8.02	8.155	0.445	0.445	0.223	0.9375	0.6250	119	29.8	3.36	40.3	9.88	1.95	3.89

PIPE PILING

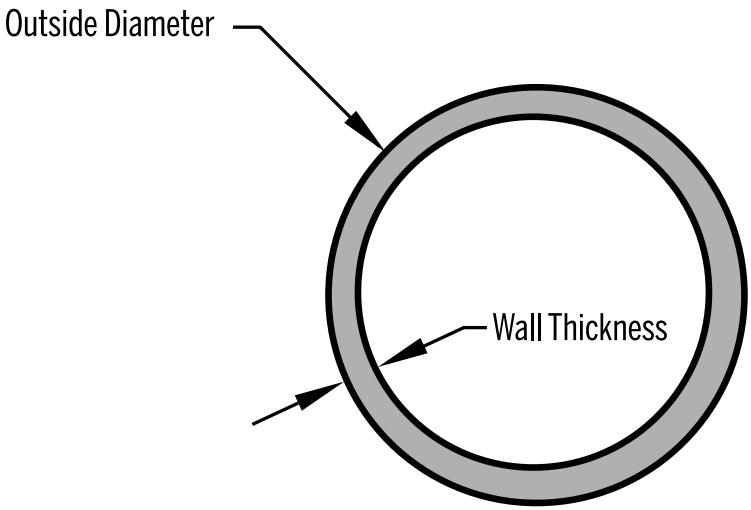

Available Grades
A252 Gr 2 and Gr 3 ERW Pipe

Accessories
Conical Points
Welded on End Plates
Backing Rings

Coatings
Galvanize per ASTM 123
Epoxy Paint

PIPE PILING

OUTSIDE DIAMETER (IN.)	WALL THICKNESS (IN.)	LBS. PER FT.
8.625	0.188	16.96
	0.219	19.68
	0.250	22.38
	0.312	27.73
	0.375	33.07
	0.438	38.33
	0.500	43.43
10.75	0.188	21.23
	0.219	24.65
	0.250	28.06
	0.312	34.81
	0.375	41.59
	0.438	48.28
	0.500	54.79
12.75	0.188	25.25
	0.219	29.34
	0.250	33.41
	0.312	41.48
	0.375	49.61
	0.438	57.65
	0.500	65.48
14	0.188	27.76
	0.219	32.26
	0.250	36.75
	0.312	45.65

PIPE PILING

OUTSIDE DIAMETER (IN.)	WALL THICKNESS (IN.)	LBS. PER FT.
14	0.375	54.62
	0.438	63.50
	0.500	72.16
16	0.188	31.78
	0.219	36.95
	0.250	42.09
	0.312	52.32
	0.375	62.64
	0.438	72.86
	0.500	82.85
	0.625	102.72
18	0.219	41.63
	0.250	47.44
	0.312	58.99
	0.375	70.65
	0.438	82.23
	0.500	93.54
	0.625	116.09
20	0.250	52.78
	0.312	65.66
	0.375	78.67
	0.438	91.59
	0.500	104.23
	0.625	129.45

FLAT SECTION PILE

SECTION	WIDTH IN. (MM)	WEB THICKNESS IN. (MM)	WEIGHT LB/FT (KG/IM)	WEIGHT LB/FT^2 (KG/M^2)	MOMENT OF INERTIA IN^4 (CM^4)	MOMENT OF INERTIA IN^4/WFT (CM^4/WM)	IN^3 (CM^3)	IN^3/WFT (CM^3/WM)	NOMINAL COATING AREA FT^2/IFT (M^2/IM)
PS 27.5	19.69 (500)	0.400 (10.2)	45.1 (67.2)	27.5 (134.5)	5.0 (208)	3.0 (416)	3.2 (5.2)	1.9 (104)	3.68 (1.12)
PS 31	19.69 (500)	0.500 (12.7)	50.9 (75.8)	31.0 (151.5)	5.0 (208)	3.0 (416)	3.2 (5.2)	1.9 (104)	3.68 (1.12)

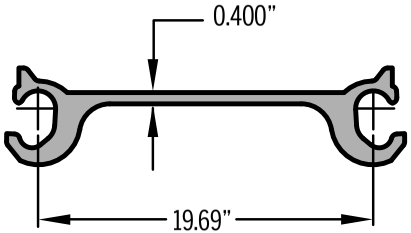

PS 27.5

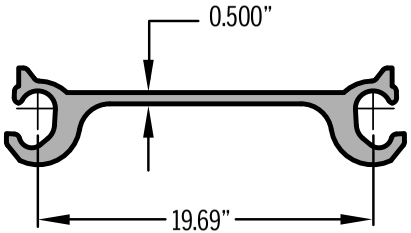

PS 31.0

SHEET PILING

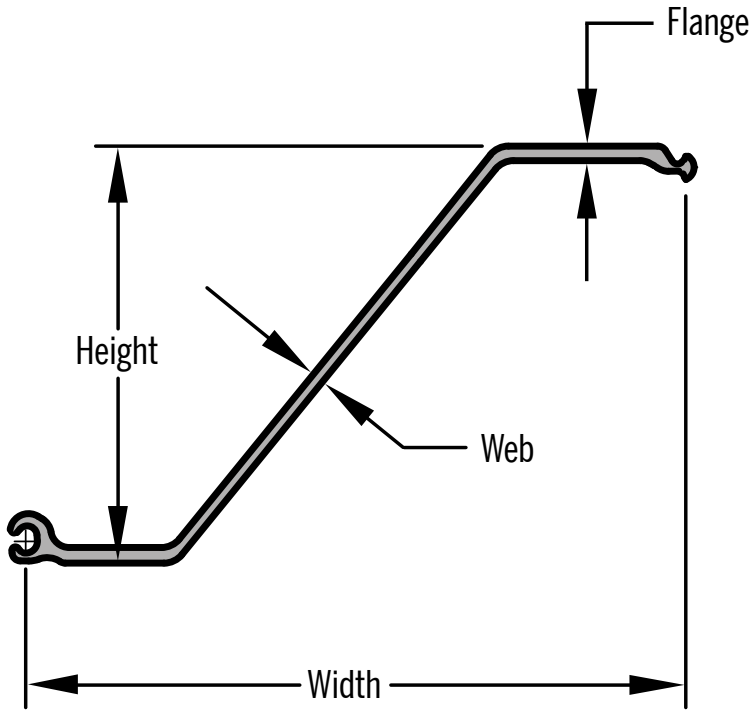

Available Grades
A572 Gr 50
A588
A690 Marine Grade

SHEET PILING

SECTION	WIDTH IN. (MM)	HEIGHT IN. (MM)	WEB THICKNESS IN. (MM)	FLANGE THICKNESS IN. (MM)	WEIGHT LB/FT (KG/IM)	WEIGHT LB/FT^2 (KG/M^2)	MOMENT OF INERTIA IN^4/WFT (CM^4/WM)	SECTION MODULUS IN^3/WFT (CM^3/WM)	NOMINAL COATING AREA FT^2/IFT (M^2/IM)
PZ 22	22 (559)	9.0 (229)	.375 (9.50)	.375 (9.50)	40.3 (60.0)	22.0 (107.4)	84.38 (11500)	18.1 (973)	4.48 (1.37)
PZ 27	18 (457)	12 (305)	.375 (9.50)	.375 (9.50)	40.5 (60.3)	27.0 (131.8)	184.20 (25200)	30.2 (1620)	4.48 (1.37)
PZ 35	22.6 (575)	14.9 (378)	.500 (12.67)	.600 (15.21)	66.0 (98.2)	35.0 (170.9)	361.22 (49300)	48.5 (2608)	5.37 (1.64)
PZ 40	19.7 (500)	16.1 (409)	.500 (12.67)	.600 (15.21)	65.6 (97.6)	40.0 (195.3)	490.85 (67000)	60.7 (3263)	5.37 (1.64)
PZC 13	27.88 (708)	12.56 (319)	.375 (9.5)	.375 (9.5)	50.4 (75.1)	21.7 (106.0)	152.0 (20753)	24.2 (1300)	5.60 (1.71)
PZC 14	27.88 (708)	12.60 (320)	.420 (10.7)	.420 (10.7)	55.0 (81.8)	23.7 (115.5)	164.8 (22499)	26.0 (1400)	5.60 (1.71)
PZC 18	25.00 (635)	15.25 (387)	.375 (9.5)	.375 (9.5)	50.4 (75.1)	24.2 (118.2)	255.5 (34888)	33.5 (1801)	5.60 (1.71)
PZC 19	25.00 (635)	15.30 (388)	.420 (10.7)	.420 (10.7)	55.0 (81.8)	26.4 (128.8)	276.7 (37790)	36.1 (1904)	5.60 (1.71)
PZC 25	27.88 (708)	17.66 (449)	.485 (12.3)	.560 (14.2)	69.4 (103.3)	29.9 (145.9)	404.4 (55230)	45.7 (2455)	6.15 (1.87)
PZC 26	27.88 (708)	17.70 (450)	.525 (13.3)	.600 (15.2)	73.9 (110.0)	31.8 (155.4)	428.1 (58460)	48.4 (2600)	6.15 (1.87)
PZC 28	27.88 (708)	17.75 (451)	.570 (14.5)	.645 (16.4)	79.0 (117.6)	34.0 (166.1)	455.1 (62150)	51.2 (2755)	6.15 (1.87)

PILING

Industry Standards

All products are produced to the listed standards except as noted

• Triad offers a complete range of Piling to include H Pile, PZC and PS Sheet Pile and Pipe Piling, along with the needed accessories and supplementary items such as tips and points. For Piling services, please view our page to see the complete list of offerings.
• Common Grades ASTM A572GR50, A252GR3

PLATE

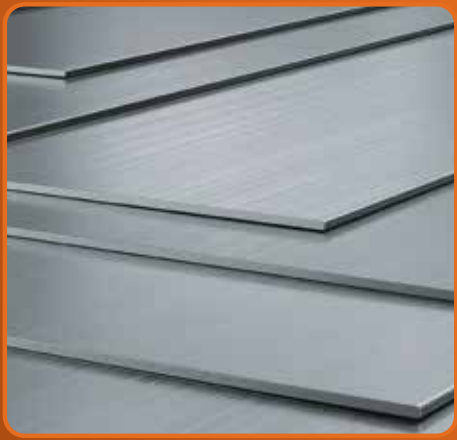

COIL

SHEET

PLATE

UM - PLATE

STRIP

HR/HRPO, COILS, CQ-HSLA

THICKNESS	LBS. PER SQ. FT.	PATTER WIDTH
1-1/2	61.2576	48”/ 60”/ 72”/ 84”/ 96”
1-1/4	51.048	48”/ 60”/ 72”/ 84”/ 96”
1	40.84	48”/ 60”/ 72”/ 84”/ 96”
7/8	35.7336	48”/ 60”/ 72”/ 84”/ 96”
3/4	30.6288	48”/ 60”/ 72”/ 84”/ 96”
5/8	25.524	48”/ 60”/ 72”/ 84”/ 96”
9/16	22.9716	48”/ 60”/ 72”/ 84”/ 96”
1/2	20.4192	48”/ 60”/ 72”/ 84”/ 96”
7/16	17.8668	48”/ 60”/ 72”/ 84”/ 96”
3/8	15.3144	48”/ 60”/ 72”/ 84”/ 96”
5/16	12.762	48”/ 60”/ 72”/ 84”/ 96”
1/4	10.2096	48”/ 60”/ 72”/ 84”/ 96”
3/16	7.6572	48”/ 60”/ 72”/ 84”/ 96”
7 GA	7.5	48”/ 60”/ 72”
8 GA	6.875	48”/ 60”/ 72”
9 GA	6.25	48”/ 60”/ 72”
10 GA	5.625	48”/ 60”/ 72”
11 GA	5.00	48”/ 60”/ 72”
12 GA	4.375	48”/ 60”/ 72”
13 GA	3.75	48”/ 60”
14 GA	3.125	48”/ 60”
16 GA	2.50	48”/ 60”

COLD ROLLED, COILS, CQ-HSLA

THICKNESS	LBS. PER SQ. FT.	PATTER WIDTH
5 GA	8.75	36”/ 48”/ 60”
6 GA	8.125	36”/ 48”/ 60”
7 GA	7.50	36”/ 48”/ 60”
8 GA	6.875	36”/ 48”/ 60”
9 GA	6.25	36”/ 48”/ 60”
10 GA	5.625	36”/ 48”/ 60”
11 GA	5.00	36”/ 48”/ 60”
12 GA	4.375	36”/ 48”/ 60”
13 GA	3.75	36”/ 48”/ 60”
14 GA	3.125	36”/ 48”/ 60”
16 GA	2.50	36”/ 48”/ 60”
18 GA	2.00	36”/ 48”/ 60”
20 GA	1.50	36”/ 48”/ 60”
22 GA	1.25	36”/ 48”/ 60”
24 GA	1.00	36”/ 48”/ 60”
26 GA	0.750	36”/ 48”/ 60”
28 GA	0.625	36”/ 48”/ 60”

HOT ROLLED, SHEET, CQ-HSLA

THICKNESS	LBS. PER SQ. FT.	STOCK SIZES
7 GA	7.50	48”x 96”/120”/ 144”/ 240”
		60”x 120”/ 144”/ 240”
		72”x 120”/ 144”/ 240”
8 GA	6.875	48”x 96”/ 120”/ 144”/ 240”
		60”x 120”/ 144”/ 240”
		72”x 120”/ 144”/ 240”
9 GA	6.25	48”x 96”/ 120”/ 144”/ 240”
		60”x 120”/ 144”/ 240”
		72”x 120”/ 144”/ 240”
10 GA	5.625	48”x 96”/ 120”/ 144”/ 240”
		60”x 120”/ 144”/ 240”
		72”x 120”/ 144”/ 240”
11 GA	5.00	48”x 96”/ 120”/ 144”/ 240”
		60”x 120”/ 144”/ 240”
		72”x 120”/ 144”/ 240”
12 GA	4.375	48”x 96”/ 120”/ 144”/ 240”
		60”x 120”/ 144”/ 240”
		72”x 120”/ 144”/ 240”
13 GA	3.75	48”x 96”/ 120”/ 144”
		60”x 96”/ 120”/ 144”
14 GA	3.125	48”x 96”/ 120”/ 144”
		60” x 96”/ 120”/ 144”
16 GA	2.50	48”x 96”/ 120”/ 144”
		60” x 96”/ 120”/ 144”

COLD ROLLED AND HRPO SHEETS ARE ALSO AVAILABLE

HOT ROLLED, PLATE, CQ-HSLA

THICKNESS	LBS. PER SQ. FT.	STOCK SIZES
3/16	7.6572	48”x 96”/ 120”/ 144”/ 240”
		60”x 120”/ 144”/ 240”
		72”x 120”/ 144”/ 240”
		96”x 120”/ 44”/ 240”
1/4	10.2096	48”x 96”/ 120”/ 144”/ 240”
		60”x 120”/ 144”/ 240”
		72”x 120”/ 144”/ 240”
		96”x 120”/ 144”/ 240”
5/16	12.762	48”x 96”/ 120”/ 144”/ 240”
		60”x 120”/ 144”/ 240”
		72”x 120”/ 144”/ 240”
		96”x 120”/ 144”/ 240”
3/8	15.3144	48”x 96”/ 120”/ 144”/ 240”
		60”x 120”/ 144”/ 240”
		72”x 120”/ 144”/ 240”
		96”x 120”/ 144”/ 240”
7/16	17.8668	48”x 96”/ 120”/ 144”/ 240”
		60”x 120”/ 144”/ 240”
		72”x 120”/ 144”/ 240”
		96”x 120”/ 144”/ 240”
1/2	20.4192	48”x 96”/ 120”/ 144”/ 240”
		60”x 120”/ 144”/ 240”
		72”x 120”/ 144”/ 240”
		96”x 120”/ 144”/ 240”

HOT ROLLED, PLATE, CQ-HSLA

THICKNESS	LBS. PER SQ. FT.	STOCK SIZES
9/16	22.9716	48”x 96”/ 120”/ 144”/ 240”
		60”x 120”/ 144”/ 240”
		72”x 120”/ 144”/ 240”
		96”x 120”/ 144”/ 240”
5/8	25.524	48”x 96”/ 120”/ 144”/ 240”
		60”x 120”/ 144”/ 240”
		72”x 120”/ 144”/ 240”
		96”x 120”/ 144”/ 240”
3/4	30.6288	48”x 96”/ 120”/ 144”/ 240”
		96” x 120”/ 144”/ 240”
7/8	35.7336	48”x 96”/ 120”/ 144”/ 240”
		96” x 120”/ 144”/ 240”
1	40.84	48”x 96”/ 120”/ 144”/ 240”
		96” x 120”/ 144”/ 240”
1-1/4	51.048	48”x 96”/ 120”/ 144”/ 240”
		96” x 120”/ 144”/ 240”
1-1/2	61.2576	48”x 96”/ 120”/ 144”/ 240”
		96” x 120”/ 144”/ 240”
1-3/4	71.4672	48”x 96”/ 120”/ 144”/ 240”
		96” x 120”/ 144”/ 240”
2	81.678	48”x 96”/ 120”/ 144”/ 240”
		96” x 120”/ 144”/ 240”

UM PLATE, CQ-HSLA

THICKNESS	WIDTH	LENGTHS
1/4 – 5/16	1 - 24	60 - 480
3/8 – 1/2	6 - 24	60 – 480

LONGER LENGTHS BY INQUIRY

STRIP, CQ-HSLA

THICKNESS	WIDTH	LENGTHS
26 GA – 3/16	1/2 - 24	60 – 240

LONGER LENGTHS BY INQUIRY

INVENTORY FOR ALL YOUR STEEL PLATE REQUIREMENTS.

3/16” through 6” thick PLATE

A36: 72x240, 96x240, 96x288, 96x480, 120x240, 120x360, 120x480.

A572-50/A709-50: 72x240, 96x240, 96x288, 96x480, 120x 240, 120x360, 120x480.

A588/A709-50W: 72x240, 96x240, 96x288, 96x480, 120x240, 120x360, 120x480.

A516-70/SA516-70: 96x480, 120x480.

A514 Gr.B, Gr. H, Gr. E: 96x240, 96x480.

AR400F: 96x288.

COIL PROCESSING

LEVEL AND CUT TO LENGTH	60”- 480”long (longer lengths may be available by inquiry)
SLITTING:	28 GA - 3/16"as narrow as 1/2"
	1/4"- 5/16"as narrow as 1"
	3/8"- 5/8"as narrow as 3"
PICKLE & OIL:	16 GA - 3/8”, 24”- 72”wide
PICKLE DRY:	7/16”- 1/2”, 24”- 60”wide
TEMPER PASS:	28 GA - 1/4”, 24”- 60”wide
COLD REDUCTION:	26 GA - 5 GA, 24”- 60”wide

GAUGE CORRECTION

COLD ROLLED CONVERSION:	28 GA - 5 GA, 24”- 68”wide
SHEAR TO SIZE:	28 GA - 1/2”, length up to 12’
BURN TO SIZE:	11 GA - 2”widths up to 9’, lengths up to 40’

CARBON STEEL PLATE

THICKNESS	SIZE (IN.)	LBS. PER SQ. FT.	WEIGHT PER PLATE
3/16 (.1875)	48 x 96	7.66	245.03
	48 x 120		306.30
	48 x 144		367.56
	60 x 96		306.32
	60 x 120		382.90
	60 x 144		459.48
	60 x 240		765.80
	72 x 120		459.40
	72 x 144		551.28
	72 x 240		918.80
	84 x 120		536.00
	84 x 240		1072.00
	96 x 120		612.60
	96 x 240		1225.20
	120 x 240		1531.44
	120 x 480		3062.88
1/4 (.250)	48 x 96	10.21	326.72
	48 x 120		408.40
	48 x 144		489.60
	48 x 240		816.00
	60 x 96		408.40
	60 x 120		510.50
	60 x 144		612.50
	60 x 240		1021.00
	72 x 96		490.00
	72 x 120		612.60
	72 x 144		735.12
	72 x 240		1225.20

CARBON STEEL PLATE

THICKNESS	SIZE (IN.)	LBS. PER SQ. FT.	WEIGHT PER PLATE
	84 x 120		714.70
	84 x 240		1429.40
	96 x 120		816.80
	96 x 240		1633.60
	120 x 120		1020.50
	120 x 240		2041.00
	120 x 360		3063.00
	120 x 480		4083.84
5/16 (.3125)	48 x 96	12.76	408.40
	48 x 120		510.50
	48 x 144		612.60
	48 x 240		1020.80
	60 x 120		638.10
	60 x 240		1276.20
	72 x 120		765.70
	72 x 240		1531.40
	84 x 120		893.20
	84 x 240		1786.60
	96 x 120		1021.00
	96 x 240		2042.00
	96 x 480		4084.00
	120 x 240		2552.40
	120 x 480		5104.80
3/8 (.375)	48 x 96	15.31	490.08
	48 x 120		612.60
	48 x 144		735.12
	48 x 240		1225.20
	60 x 120		765.70

CARBON STEEL PLATE

THICKNESS	SIZE (IN.)	LBS. PER SQ. FT.	WEIGHT PER PLATE
	60 x 144		918.84
	60 x 240		1531.40
	72 x 96		735.12
	72 x 120		918.90
	72 x 144		1102.68
	72 x 240		1837.80
	72 x 288		2205.36
	84 x 120		1072.00
	84 x 240		2144.00
	96 x 120		1225.20
	96 x 240		2450.40
	96 x 288		2940.48
	120 x 120		1531.40
	120 x 240		3062.80
	120 x 360		4594.00
	120 x 480		6125.76
1/2 (.500)	48 x 96	20.42	653.44
	48 x 120		816.80
	48 x 144		980.16
	48 x 240		1633.60
	60 x 120		1021.00
	60 x 144		1225.20
	60 x 240		2042.00
	72 x 120		1225.20
	72 x 144		1470.24
	72 x 240		2450.40
	72 x 288		2940.48
	84 x 120		1429.30

CARBON STEEL PLATE

THICKNESS	SIZE (IN.)	LBS. PER SQ. FT.	WEIGHT PER PLATE
	84 x 240		2858.60
	96 x 120		1633.50
	96 x 240		3267.00
	120 x 120		2041.90
	120 x 240		4083.80
	120 x 360		6125.70
	120 x 480		8167.68
5/8 (.625)	48 x 96	25.52	816.80
	48 x 120		1021.00
	48 x 144		1225.20
	60 x 120		1276.20
	60 x 240		2552.40
	72 x 120		1531.40
	72 x 240		3062.80
	84 x 120		1786.70
	84 x 240		3573.40
	96 x 120		2041.90
	96 x 240		4083.80
	96 x 360		6125.76
	120 x 120		2552.40
	120 x 240		5104.80
	120 x 360		7657.00
	120 x 480		10209.60
3/4 (.750)	48 x 96	30.63	980.16
	48 x 120		1225.20
	48 x 240		2450.40
	60 x 120		1531.40
	60 x 240		3062.80

CARBON STEEL PLATE

THICKNESS	SIZE (IN.)	LBS. PER SQ. FT.	WEIGHT PER PLATE
	72 x 120		1837.70
	72 x 240		3675.40
	84 x 120		2144.00
	84 x 240		4288.00
	96 x 120		2450.30
	96 x 240		4900.60
	96 x 360		7350.90
	120 x 120		3062.90
	120 x 240		6125.80
	120 x 360		9188.70
	120 x 480		12251.52
7/8 (.875)	48 x 96	35.73	1143.44
	48 x 120		1429.30
	60 x 120		1786.68
	60 x 240		3573.36
	72 x 120		2144.00
	72 x 240		4288.00
	84 x 120		2501.40
	84 x 240		5002.80
	96 x 120		2858.70
	96 x 240		5717.40
	120 x 120		3573.40
	120 x 240		7146.80
	120 x 360		10720.00
	120 x 480		14293.44
1 (1)	48 x 96	40.84	1306.80
	48 x 120		1633.50
	48 x 240		3267.00

CARBON STEEL PLATE

THICKNESS	SIZE (IN.)	LBS. PER SQ. FT.	WEIGHT PER PLATE
	60 x 120		2041.90
	60 x 240		4083.80
	72 x 120		2450.30
	72 x 240		4900.60
	72 x 288		5880.72
	84 x 120		2858.70
	84 x 240		5717.40
	96 x 120		3267.10
	96 x 240		6534.20
	96 x 288		7841.04
	96 x 360		9801.30
	96 x 480		13068.40
	120 x 120		4083.80
	120 x 240		8167.50
	120 x 360		12251.40
	120 x 480		16335.36
1-1/8 (1.125)	48 x 120	45.94	1837.70
	60 x 120		2297.16
	60 x 240		4594.32
	72 x 120		2756.60
	72 x 240		5513.20
	84 x 120		3216.00
	84 x 240		6432.00
	96 x 120		3675.50
	96 x 240		7351.00
	120 x 120		4594.30
	120 x 240		9188.60
	120 x 360		13782.90

CARBON STEEL PLATE

THICKNESS	SIZE (IN.)	LBS. PER SQ. FT.	WEIGHT PER PLATE
	120 x 480		18377.28
1-1/4 (1.25)	48 x 96	51.05	1633.52
	48 x 120		2041.90
	48 x 240		4083.80
	60 x 120		2552.40
	60 x 240		5104.80
	72 x 120		3062.90
	72 x 240		6125.80
	72 x 288		7350.96
	84 x 120		3573.40
	84 x 240		7146.80
	96 x 120		4083.80
	96 x 240		8167.60
	96 x 360		12251.40
	96 x 480		16335.20
	120 x 120		5104.80
	120 x 240		10209.60
	120 x 360		15314.40
	120 x 480		20419.20
1-3/8 (1.375)	48 x 120	56.15	2246.00
	48 x 240		4492.00
	60 x 120		2807.50
	60 x 240		5615.00
	72 x 120		3369.20
	72 x 240		6738.40
	84 x 120		3930.70
	84 x 240		7861.40
	96 x 120		4492.20

CARBON STEEL PLATE

THICKNESS	SIZE (IN.)	LBS. PER SQ. FT.	WEIGHT PER PLATE
	96 x 240		8984.40
	120 x 120		5615.00
	120 x 240		11230.00
	120 x 480		22461.12
1-1/2 (1.5)	48 x 96	61.26	1960.24
	48 x 120		2450.30
	48 x 240		4900.60
	60 x 120		3062.90
	60 x 240		6125.80
	72 x 120		3675.50
	72 x 240		7351.00
	84 x 120		4288.00
	84 x 240		8576.00
	96 x 120		4900.60
	96 x 240		9801.20
	96 x 360		14701.80
	120 x 120		6125.80
	120 x 240		12251.60
	120 x 360		18377.40
	120 x 480		24503.04
1-5/8 (1.625)	48 x 120	66.36	2654.40
	48 x 240		5308.80
	60 x 120		3318.12
	60 x 240		6636.24
	72 x 120		3981.74
	72 x 240		7963.48
	84 x 120		4645.40
	84 x 240		9290.80

CARBON STEEL PLATE

THICKNESS	SIZE (IN.)	LBS. PER SQ. FT.	WEIGHT PER PLATE
	96 x 120		5309.00
	96 x 240		10618.00
	120 x 120		6636.00
	120 x 240		13272.00
	120 x 360		19908.72
	120 x 480		26544.96
1-3/4 (1.75)	48 x 96	71.47	2286.96
	48 x 120		2858.70
	48 x 240		5717.40
	60 x 120		3573.36
	60 x 240		7146.72
	72 x 120		4288.00
	72 x 240		8576.00
	84 x 120		5002.70
	84 x 240		10005.40
	96 x 120		5717.40
	96 x 240		11434.80
	120 x 120		7146.72
	120 x 240		14293.44
	120 x 288		17152.08
	120 x 360		21440.20
	120 x 480		28586.88
1-7/8 (1.875)	48 x 120	76.572	3062.88
	48 x 240		6125.76
	60 x 120		3828.60
	60 x 240		7657.20
	72 x 120		4594.32
	72 x 240		9188.64

CARBON STEEL PLATE

THICKNESS	SIZE (IN.)	LBS. PER SQ. FT.	WEIGHT PER PLATE
	84 x 120		5360.04
	84 x 240		10720.08
	96 x 120		6125.76
	96 x 240		12251.52
	120 x 120		7657.20
	120 x 240		15314.40
2 (2)	48 x 120	81.68	3267.10
	48 x 240		6534.20
	60 x 120		4083.80
	60 x 240		8167.60
	72 x 120		4900.60
	72 x 240		9801.20
	72 x 288		11761.40
	84 x 120		5717.40
	84 x 240		11434.80
	96 x 120		6534.10
	96 x 240		13068.20
	96 x 360		19602.30
	120 x 120		8167.70
	120 x 240		16335.40
	120 x 288		19602.48
	120 x 360		24503.00
	120 x 480		32670.72
2-1/4 (2.25)	48 x 120	91.89	3675.46
	48 x 240		7350.92
	60 x 120		4594.50
	60 x 240		9189.00
	72 x 120		5513.20

CARBON STEEL PLATE

THICKNESS	SIZE (IN.)	LBS. PER SQ. FT.	WEIGHT PER PLATE
	72 x 240		11026.40
	84 x 120		6432.00
	84 x 240		12864.00
	96 x 120		7350.90
	96 x 240		14701.80
	120 x 120		9188.64
	120 x 240		18377.28
	120 x 360		27565.92
	120 x 480		36754.56
2-3/8 (2.375)	48 x 120	96.99	3879.60
	48 x 240		7759.20
	60 x 120		4849.50
	60 x 240		9699.00
	72 x 120		5819.40
	72 x 240		11638.80
	84 x 120		6789.30
	84 x 240		13578.60
	96 x 120		7759.20
	96 x 240		15518.40
	120 x 120		9699.00
	120 x 240		19398.00
2-1/2 (2.5)	48 x 120	102.10	4083.84
	48 x 240		8167.68
	60 x 120		5104.80
	60 x 240		10209.60
	72 x 120		6125.80
	72 x 240		12251.60
	84 x 120		7146.70

CARBON STEEL PLATE

THICKNESS	SIZE (IN.)	LBS. PER SQ. FT.	WEIGHT PER PLATE
	84 x 240		14293.40
	96 x 120		8167.70
	96 x 240		16335.40
	120 x 120		10209.60
	120 x 240		20419.20
	120 x 360		30628.80
	120 x 480		40838.40
2-3/4 (2.75)	48 x 120	112.31	4492.22
	48 x 240		8984.44
	60 x 120		5615.28
	60 x 240		11230.56
	72 x 120		6738.34
	72 x 240		13476.68
	84 x 120		7861.40
	84 x 240		15722.80
	96 x 120		8984.40
	96 x 240		17968.80
	120 x 120		11230.56
	120 x 240		22461.12
	120 x 360		33691.68
	120 x 480		44922.24
3 (3)	48 x 120	122.52	4900.61
	48 x 240		9801.22
	60 x 120		6125.76
	60 x 240		12251.52
	72 x 120		7350.90
	72 x 240		14701.80
	84 x 120		8576.10

CARBON STEEL PLATE

THICKNESS	SIZE (IN.)	LBS. PER SQ. FT.	WEIGHT PER PLATE
	84 x 240		17152.20
	96 x 120		9801.20
	96 x 240		19602.40
	120 x 360		36754.56
	120 x 480		49006.08
3-1/4 (3.25)	48 x 120	132.72	5308.90
	48 x 240		10617.60
	60 x 120		6636.00
	60 x 240		13272.00
	72 x 120		7963.20
	72 x 240		15926.40
	84 x 120		9290.70
	84 x 240		18581.40
	96 x 120		10618.00
	96 x 240		21236.00
3-1/2 (3.5)	48 x 120	142.93	5717.20
	48 x 240		11434.40
	60 x 120		7146.50
	60 x 240		14293.00
	72 x 120		8575.80
	72 x 240		17151.60
	84 x 120		10005.40
	84 x 240		20010.80
	96 x 120		11434.80
	96 x 240		22869.60
3-3/4 (3.75)	48 x 120	153.14	6125.60
	48 x 240		12251.20
	60 x 120		7657.00

CARBON STEEL PLATE

THICKNESS	SIZE (IN.)	LBS. PER SQ. FT.	WEIGHT PER PLATE
	60 x 240		15314.00
	72 x 120		9188.40
	72 x 240		18376.80
	84 x 120		10720.00
	84 x 240		21440.20
	96 x 120		12251.50
	96 x 240		24503.00
4 (4)	48 x 120	163.35	6534.10
	48 x 240		13068.20
	60 x 120		8167.50
	60 x 240		16335.00
	72 x 120		9801.00
	72 x 240		19602.00
	84 x 120		11434.80
	84 x 240		22869.60
	96 x 120		13068.30
	96 x 240		26136.60
4-1/4 (4.25)	48 x 120	173.56	6942.40
	48 x 240		13884.80
	60 x 120		9678.00
	60 x 240		17356.00
	72 x 120		10413.60
	72 x 240		20827.20
	84 x 120		12149.40
	84 x 240		24298.80
	96 x 120		13885.10
	96 x 240		27770.20
4-1/2 (4.5)	48 x 120	183.77	7350.80

CARBON STEEL PLATE

THICKNESS	SIZE (IN.)	LBS. PER SQ. FT.	WEIGHT PER PLATE
	48 x 240		14701.60
	60 x 120		9188.50
	60 x 240		18377.00
	72 x 120		11026.20
	72 x 240		22052.40
	84 x 120		12864.10
	84 x 240		25728.20
	96 x 120		14701.80
	96 x 240		29403.60
4-3/4 (4.75)	48 x 120	193.98	7759.20
	48 x 240		15518.40
	60 x 120		9699.00
	60 x 240		19398.00
	72 x 120		11638.80
	72 x 240		23277.60
	84 x 120		13578.80
	84 x 240		27157.60
	96 x 120		15518.60
	96 x 240		31037.20
5 (5)	48 x 120	204.19	8167.70
	48 x 240		16335.40
	60 x 120		10209.60
	60 x 240		20419.20
	72 x 120		12251.50
	72 x 240		24503.00
	84 x 120		14293.40
	84 x 240		28586.80
	96 x 120		16335.40

CARBON STEEL PLATE

THICKNESS	SIZE (IN.)	LBS. PER SQ. FT.	WEIGHT PER PLATE
	96 x 240		32670.80
5-1/4 (5.25)	48 x 120	214.40	8576.00
	48 x 240		17152.00
	60 x 120		10720.00
	60 x 240		21440.00
	72 x 120		12864.00
	72 x 240		25728.00
	84 x 120		15008.10
	84 x 240		30016.20
	96 x 120		17152.10
	96 x 240		34304.20
5-1/2 (5.5)	48 x 120	224.61	8984.40
	48 x 240		17968.80
	60 x 120		11230.50
	60 x 240		22461.00
	72 x 120		13476.60
	72 x 240		26953.20
	84 x 120		15722.80
	84 x 240		31445.60
	96 x 120		17968.90
	96 x 240		35937.80
6 (6)	48 x 120	245.03	9801.20
	48 x 240		19602.40
	60 x 120		12251.50
	60 x 240		24503.00
	72 x 120		14701.80
	72 x 240		29403.60
	84 x 120		17152.10

CARBON STEEL PLATE

THICKNESS	SIZE (IN.)	LBS. PER SQ. FT.	WEIGHT PER PLATE
	84 x 240		34304.20
	96 x 120		19602.40
	96 x 240		39204.80
6-1/2 (6.5)	48 x 120	265.45	10618.00
	48 x 240		21236.00
	60 x 120		13272.50
	60 x 240		26545.00
	72 x 120		15927.00
	72 x 240		31854.00
	84 x 120		18581.50
	84 x 240		37163.00
	96 x 120		21236.00
	96 x 240		42472.00
7 (7)	48 x 120	285.87	11434.80
	48 x 240		22869.60
	60 x 120		14293.50
	60 x 240		28587.00
	72 x 120		17152.20
	72 x 240		34304.40
	84 x 120		20010.80
	84 x 240		40021.60
	96 x 120		22869.60
	96 x 240		45739.20
7-1/2 (7.5)	48 x 120	306.29	12251.60
	48 x 240		24503.20
	60 x 120		15314.50
	60 x 240		30629.00
	72 x 120		18377.40

CARBON STEEL PLATE

THICKNESS	SIZE (IN.)	LBS. PER SQ. FT.	WEIGHT PER PLATE
	72 x 240		36754.80
	84 x 120		21440.30
	84 x 240		42880.60
	96 x 120		24503.20
	96 x 240		49006.40
8 (8)	48 x 120	326.71	13068.40
	48 x 240		26136.80
	60 x 120		16335.50
	60 x 240		32671.00
	72 x 120		19602.40
	72 x 240		39204.80
	84 x 120		22869.50
	84 x 240		45739.00
	96 x 120		26136.60
	96 x 240		52273.20
8-1/2 (8.5)	48 x 120	347.13	13885.06
	60 x 120		17356.32
	60 x 240		34712.64
	72 x 120		20827.60
	72 x 240		41655.20
	84 x 120		24298.80
	84 x 240		48597.60
	96 x 120		27770.10
	96 x 240		55540.20
9 (9)	48 x 120	367.55	14701.82
	60 x 120		18377.28
	60 x 240		36754.56
	72 x 120		22052.70

CARBON STEEL PLATE

THICKNESS	SIZE (IN.)	LBS. PER SQ. FT.	WEIGHT PER PLATE
	72 x 240		44105.40
	84 x 120		25728.20
	84 x 240		51546.40
	90 x 120		27565.90
	90 x 240		55131.80
	96 x 120		29403.60
	96 x 240		58807.20
9-1/2 (9.5)	48 x 120	387.97	15518.59
	60 x 120		19398.50
	72 x 120		23278.20
	72 x 240		46556.40
	84 x 120		27157.90
	84 x 240		54315.80
	96 x 120		31037.60
	96 x 240		62075.20
10 (10)	48 x 120	408.38	16335.20
	60 x 120		20419.00
	72 x 120		24502.80
	84 x 120		28586.90
	84 x 240		57173.80
	90 x 120		30628.80
	90 x 240		61257.60
	96 x 120		32670.70
	96 x 240		65341.40

CARBON STEEL PLATE

THICKNESS	SIZE (IN.)	LBS. PER SQ. FT.	WEIGHT PER PLATE
10-1/2 (10.5)	48 x 120	428.80	
11 (11)	48 x 120	449.22	
11-1/2 (11.5)	48 x 120	469.64	
12 (12)	48 x 120	490.06	19602.40
	60 x 120		24503.00
	72 x 120		29403.60
	84 x 120		34304.20
	84 x 240		68608.40
	90 x 120		36754.50
	90 x 240		73509.00
	96 x 120		39204.90
	96 x 240		78409.80
12-1/2 (12.5)	48 x 120	510.48	
13 (13)	48 x 120	530.90	
14 (14)	48 x 120	571.74	

Industry Standards

All products are produced to the listed standards except as noted

Carbon steel plate has many applications in manufacturing. One example where steel plate can be found is in the manufacturing of vessels. Because of this they offer the ability to withstand tremendous weights and pressures. Triad Metals offers many different sizes, widths, lengths and specifications for Steel Plate.
ASTM A516-70 - Standard Specification for Pressure Vessel Plates, Carbon Steel, for Moderate- and Lower-Temperature Service. This specification covers carbon steel plates intended primarily for service in welded pressure vessels

PLATE

where improved notch toughness is important.
ASTM - A514 - Standard specification for high-yield-strength, quenched and tempered alloy steel plate, suitable for welding. This specification covers quenched and tempered alloy steel plates of structural quality intended primarily for use in welded bridge construction and other structures.
ASTM - A709 - Standard specification for carbon and high-strength low-alloy and quenched-and-tempered alloy structural steel plates for bridges. This specification covers carbon HSLA plates intended for use in bridges. Seven grades are available in four yield strength levels.
AR400F - This product is designed for applications that require wear resistance, impact toughness, formability, and weldability. Typical applications include dump truck bodies, shredders, buckets and shovels for heavy equipment, mining and quarry equipment, conveyers and other miscellaneous wear parts.
FLOOR PLATE - Also known as checker plate or diamond plate, is produced with a pattern of raised diamonds on one side. Floor plate is produced for uses in non-skid applications such as stairs, catwalks, ramps, the interior of ambulances, and footplates of firetrucks
ABS PLATE - A structural carbon steel for use in shipbuilding applications. All ABS steels are standardized by the American Bureau of Shipping. Ordinary strength ABS steels have a yield strength of 34,000 psi and tensile strength of 58,000-71,000 psi. Higher strength ABS steels include the 32 grades (yield strength 45,500 psi and tensile strength 64,000-85,000 psi) and the 36 grades (yield strength 51,000 psi and tensile strength 71,000-90,000 psi).

We stock laser quality plate in A36 and A572-50 form 3/16” thru 1 ¼”, A36. Material is commonly stocked with a modified MN, A572-50 and A588 commonly stocked with mill CVN’s.

TUBE/PIPE

STRUCTURAL PIPE

A53 PIPE

SQUARE TUBE

RECTANGULAR TUBE

TUBE/PIPE

PIPE

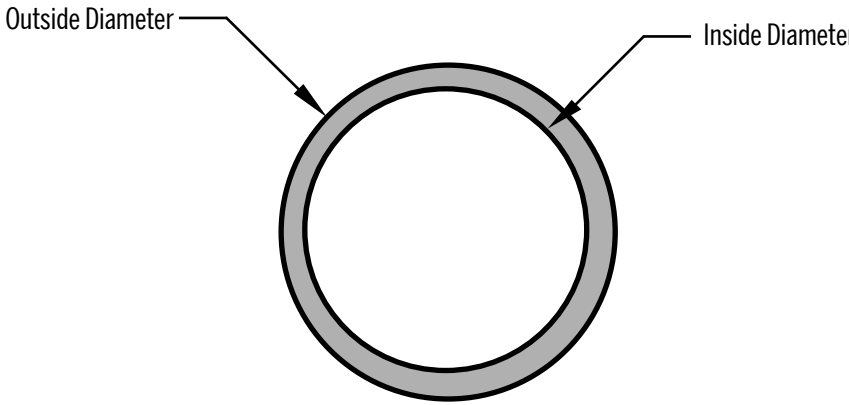

A53 PIPE

SIZE (IN.)	OUTSIDE DIAMETER	SCHEDULE	WALL THICKNESS	LBS. PER. FT.
2	2.375	SCH 40	0.154	3.653
2-1/2	2.875	SCH 40	0.203	5.800
		SCH 80	0.276	7.661
3	3.500	SCH 40	0.216	7.580
		SCH 80	0.300	10.250
3-1/2	4.000	SCH 40	0.226	9.120
4	4.500	SCH 40	0.237	10.800
5	5.563	SCH 40	0.258	14.620
6	6.625	SCH 40	0.280	18.990

PIPE

DIAMETER (IN.)	OUTSIDE DIAMETER	WALL	LBS. PER. FT.
1/2	.840	SCH 40	0.851
3/4	1.05	SCH 40	1.131
1	1.315	SCH 10	1.404
	1.315	SCH 40	1.679
	1.315	SCH 80	2.172
1-1/4	1.66	SCH 10	1.806
	1.66	SCH 40	2.273
1-1/2	1.90	SCH 40	2.720
2 SCH	2.375	40	3.653
	2.375	SCH 80	5.022
2-1/2	2.875	SCH 40	5.800
3	3.50	SCH 40	7.580
	3.50	SCH 80	10.250
3-1/2	4.00	SCH 40	9.120
4	4.50	SCH 40	10.800
5	5.563	SCH 40	14.620
6	6.625	SCH 40	18.99
	6.625	SCH 80	28.600
8	8.625	SCH 40	28.58
	8.625	XH 43.430	

SQUARE TUBING

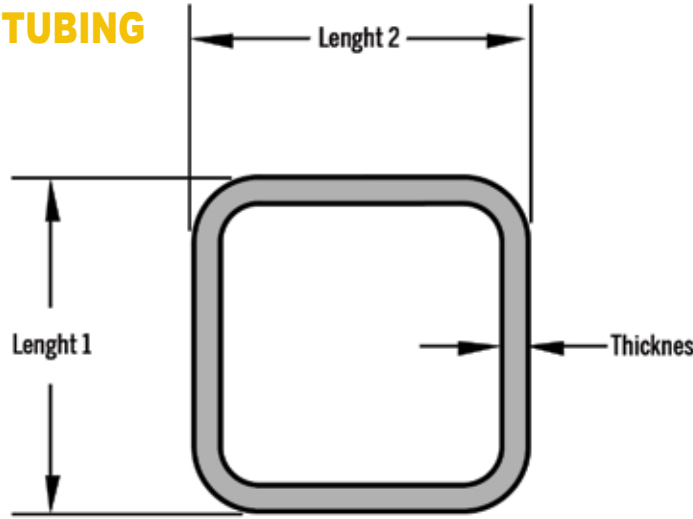

RECTANGULAR TUBING

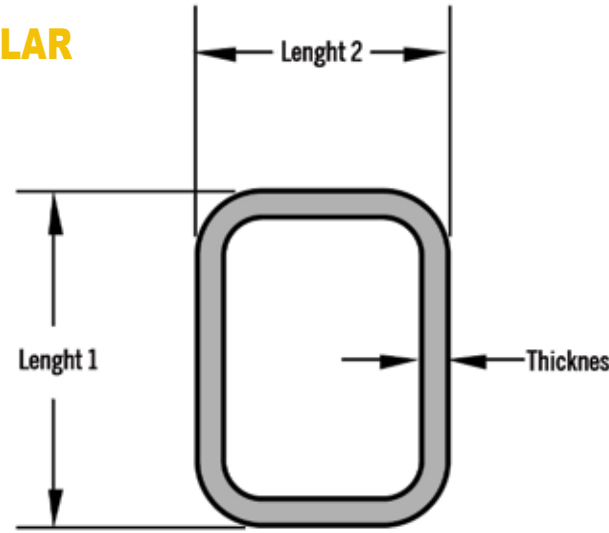

SQUARE TUBING

SIDES		WALL (IN.)	WALL (GA)	LBS. PER. FT.
3/4 x 3/4	x	0.063	16GA	0.606
	x	0.083	14GA	0.753
	x	0.120	11GA	1.028
1 x 1	x	0.063	16GA	0.827
	x	0.083	14GA	1.034
	x	0.120	11GA	1.448
1-1/4 x 1-1/4	x	0.063	16GA	1.048
	x	0.083	14GA	1.317
	x	0.120	11GA	1.846
1-1/2 x 1-1/2	x	0.063	16GA	1.269
	x	0.083	14GA	1.611
	x	0.120	11GA	2.252
	x	0.188	3/16	3.350
	x	0.250	1/4	4.25
2 x 2	x	0.063	16GA	1.711
	x	0.083	14GA	2.166
	x	0.120	11GA	3.070
	x	0.134	10GA	3.401
	x	0.188	3/16	4.32
	x	0.250	1/4	5.41
2-1/2 x 2-1/2	x	0.083	14GA	2.728
	x	0.120	11GA	3.910
	x	0.188	3/16	5.61
	x	0.250	1/4	7.11
3 x 3	x	0.120	11GA	4.652
	x	3/16	3/16	6.89
	x	1/4	1/4	8.81
	x	5/16	5/16	10.59
	x	3/8	3/8	12.16

SQUARE TUBING

SIDES		WALL (IN.)	WALL (GA)	LBS. PER. FT.
3-1/2 x 3-1/2	x	0.120	11GA	5.61
	x	3/16	3/16	8.17
	x	1/4	1/4	10.51
	x	5/16	5/16	12.70
	x	3/8	3/8	14.71
4 x 4	x	0.120	11GA	4.760
	x	3/16	3/16	9.45
	x	1/4	1/4	12.21
	x	5/16	5/16	14.83
	x	3/8	3/8	17.27
	x	1/2	1/2	21.63
5 x 5	x	3/16	3/16	12.00
	x	1/4	1/4	15.62
	x	5/16	5/16	19.08
	x	3/8	3/8	22.37
	x	1/2	1/2	28.43
6 x 6	x	3/16	3/16	14.56
	x	1/4	1/4	19.02
	x	5/16	5/16	23.34
	x	3/8	3/8	27.48
	x	1/2	1/2	35.24
	x	5/8	5/8	43.67
7 x 7	x	3/16	3/16	17.13
	x	1/4	1/4	22.42
	x	3/8	3/8	32.58
	x	1/2	1/2	42.05
	x	5/8	5/8	50.77

SQUARE TUBING

SIDES		WALL (IN.)	WALL (GA)	LBS. PER. FT.
8 x 8	x	3/16	3/16	19.63
	x	1/4	1/4	25.82
	x	5/16	5/16	31.84
	x	3/8	3/8	37.69
	x	1/2	1/2	48.85
	x	5/8	5/8	59.32
9 x 9	x	3/16	3/16	22.18
	x	1/4	1/4	29.23
	x	5/16	5/16	36.10
	x	3/8	3/8	42.79
	x	1/2	1/2	55.66
	x	5/8	5/8	67.82
10 x 10	x	3/16	3/16	24.73
	x	1/4	1/4	32.63
	x	5/16	5/16	40.35
	x	3/8	3/8	47.90
	x	1/2	1/2	62.46
	x	5/8	5/8	76.33
	x	3/4	3/4	89.50
12 x 12	x	3/16	3/16	29.84
	x	1/4	1/4	39.43
	x	5/16	5/16	48.86
	x	3/8	3/8	58.10
	x	1/2	1/2	76.07
	x	5/8	5/8	93.36
	x	3/4	3/4	109.90

SQUARE TUBING

SIDES		WALL (IN.)	WALL (GA)	LBS. PER. FT.
14 x 14	x	5/16	5/16	57.36
	x	3/8	3/8	68.31
	x	1/2	1/2	89.68
	x	5/8	5/8	110.36
	x	3/4	3/4	130.30
	x	7/8	7/8	149.60
16 x 16	x	5/16	5/16	65.87
	x	3/8	3/8	78.52
	x	1/2	1/2	103.3
	x	5/8	5/8	127.37
	x	3/4	3/4	150.80
	x	7/8	7/8	173.40
18 x 18	x	1/2	1/2	116.90
	x	5/8	5/8	144.40
	x	3/4	3/4	171.10
	x	7/8	7/8	197.20
20 x 20	x	1/2	1/2	130.50
	x	5/8	5/8	161.40
	x	3/4	3/4	191.60
	x	7/8	7/8	221.10
22 x 22	x	.750	3/4	212.00
	x	.875	7/8	244.90

RECTANGULAR TUBING

SIDE 1		SIDE 2	WALL (IN.)	WALL (GA)	LBS. PER. FT.
2	x	1	0.063	16GA	1.269
	x	1	0.083	14GA	1.611
	x	1	0.120	11GA	2.252
	x	1	0.188	3/16	3.35
	x	1-1/2	0.083	14GA	1.882
	x	1-1/2	0.120	11GA	2.660
	x	1-1/2	0.188	3/16	3.893
2-1/2	x	1	0.063	16GA	1.45
	x	1	0.083	14GA	1.82
	x	1	0.120	11GA	2.660
	x	1	0.188	3/16	3.893
	x	1-1/2	0.083	14GA	2.11
	x	1-1/2	0.120	11GA	3.06
	x	1-1/2	0.188	3/16	4.32
	x	1-1/2	0.250	1/4	5.41
	x	2	0.120	11GA	3.48
	x	2	0.188	3/16	5.067
3	x	1	0.063	16GA	1.67
	x	1	0.083	14GA	2.14
	x	1	0.120	11GA	3.06
	x	1	0.188	3/16	4.32
	x	1-1/2	0.083	14GA	2.446
	x	1-1/2	0.120	11GA	3.48
	x	1-1/2	0.188	3/16	5.067
	x	1-1/2	0.250	1/4	6.26
	x	2	0.083	14GA	2.728
	x	2	0.120	11GA	3.91
	x	2	0.188	3/16	5.61
	x	2	0.250	1/4	7.11

RECTANGULAR TUBING

SIDE 1		SIDE 2	WALL (IN.)	WALL (GA)	LBS. PER. FT.
3-1/2	x	1-1/2	0.120	11GA	3.91
	x	1-1/2	0.188	3/16	5.61
	x	2-1/2	0.120	11GA	4.76
	x	2-1/2	0.188	3/16	6.89
	x	2-1/2	0.250	1/4	8.81
4	x	2	0.083	14GA	3.293
	x	2	0.120	11GA	4.75
	x	2	0.188	3/16	6.89
	x	2	0.250	1/4	8.81
	x	2	0.313	5/16	10.58
	x	2	0.375	3/8	12.17
	x	3	0.120	11GA	5.61
	x	3	0.188	3/16	8.17
	x	3	0.250	1/4	10.51
	x	3	0.313	5/16	12.70
	x	3	0.375	3/8	14.72
5	x	2	0.120	11GA	5.61
	x	2	0.188	3/16	8.17
	x	2	0.250	1/4	10.51
	x	2	0.313	5/16	12.70
	x	2	0.375	3/8	14.72
	x	3	0.120	11GA	6.46
	x	3	0.188	3/16	9.45
	x	3	0.250	1/4	12.21
	x	3	0.313	5/16	14.83
	x	3	0.375	3/8	17.27
	x	3	0.500	1/2	21.63

RECTANGULAR TUBING

SIDE 1		SIDE 2	WALL (IN.)	WALL (GA)	LBS. PER. FT.
6	x	2	0.120	11GA	6.46
	x	2	0.188	3/16	9.45
	x	2	0.250	1/4	12.21
	x	2	0.313	5/16	14.83
	x	2	0.375	3/8	17.27
	x	3	0.120	11GA	7.31
	x	3	0.188	3/16	10.70
	x	3	0.250	1/4	13.91
	x	3	0.313	5/16	16.96
	x	3	0.375	3/8	19.82
	x	3	0.500	1/2	24.28
	x	4	0.120	11GA	8.16
	x	4	0.188	3/16	12.00
	x	4	0.250	1/4	15.62
	x	4	0.313	5/16	19.08
	x	4	0.375	3/8	22.37
	x	4	0.500	1/2	28.43
7	x	3	0.120	11GA	8.16
	x	3	0.188	3/16	12.00
	x	3	0.250	1/4	15.62
	x	3	0.313	5/16	19.08
	x	3	0.375	3/8	22.37
	x	3	0.500	1/2	28.43
	x	4	0.120	11GA	9.01
	x	4	0.188	3/16	13.30
	x	4	0.250	1/4	17.32
	x	4	0.313	5/16	21.22
	x	4	0.375	3/8	24.93
	x	4	0.500	1/2	31.84

RECTANGULAR TUBING

SIDE 1		SIDE 2	WALL (IN.)	WALL (GA)	LBS. PER. FT.
7	x	5	0.120	11GA	9.86
	x	5	0.188	3/16	14.56
	x	5	0.250	1/4	19.02
	x	5	0.313	5/16	23.34
	x	5	0.375	3/8	27.48
	x	5	0.500	1/2	35.24
8	x	2	0.120	11GA	8.16
	x	2	0.188	3/16	12.00
	x	2	0.250	1/4	15.62
	x	2	0.313	5/16	19.08
	x	2	0.375	3/8	22.37
	x	3	0.120	11GA	9.01
	x	3	0.188	3/16	13.30
	x	3	0.250	1/4	17.32
	x	3	0.313	5/16	21.22
	x	3	0.375	3/8	24.93
	x	3	0.500	1/2	31.84
	x	4	0.120	11GA	9.86
	x	4	0.188	3/16	14.56
	x	4	0.250	1/4	19.02
	x	4	0.313	5/16	23.34
	x	4	0.375	3/8	27.48
	x	4	0.500	1/2	35.24
	x	6	0.188	3/16	17.13
	x	6	0.250	1/4	22.42
	x	6	0.313	5/16	27.63
	x	6	0.375	3/8	32.58
	x	6	0.500	1/2	42.05
	x	6	0.625	5/8	50.81

RECTANGULAR TUBING

SIDE 1		SIDE 2	WALL (IN.)	WALL (GA)	LBS. PER. FT.
10	x	2	0.120	11GA	9.86
	x	2	0.188	3/16	14.56
	x	2	0.250	1/4	19.02
	x	2	0.313	5/16	23.34
	x	2	0.375	3/8	27.48
	x	3	0.120	11GA	10.71
	x	3	0.188	3/16	15.80
	x	3	0.250	1/4	20.72
	x	3	0.313	5/16	25.48
	x	3	0.375	3/8	30.03
	x	3-1/2	0.120	11GA	11.13
	x	3-1/2	0.188	3/16	16.47
	x	3-1/2	0.250	1/4	21.57
	x	3-1/2	0.313	5/16	26.53
	x	3-1/2	0.375	3/8	31.31
	x	4	0.188	3/16	17.13
	x	4	0.250	1/4	22.42
	x	4	0.313	5/16	27.63
	x	4	0.375	3/8	32.58
	x	4	0.500	1/2	42.05
	x	6	0.188	3/16	19.63
	x	6	0.250	1/4	25.82
	x	6	0.313	5/16	31.84
	x	6	0.375	3/8	37.69
	x	6	0.500	1/2	48.85
	x	6	0.625	5/8	59.32
	x	8	0.188	3/16	22.18
	x	8	0.250	1/4	29.23
	x	8	0.313	5/16	36.12

RECTANGULAR TUBING

SIDE 1		SIDE 2	WALL (IN.)	WALL (GA)	LBS. PER. FT.
10	x	8	0.375	3/8	42.79
	x	8	0.500	1/2	55.66
	x	8	0.625	5/8	67.82
12	x	4	0.188	3/16	19.63
	x	4	0.250	1/4	25.82
	x	4	0.313	5/16	31.84
	x	4	0.375	3/8	37.69
	x	4	0.500	1/2	48.85
	x	4	0.625	5/8	59.32
	x	6	0.188	3/16	22.18
	x	6	0.250	1/4	29.23
	x	6	0.313	5/16	36.12
	x	6	0.375	3/8	42.79
	x	6	0.500	1/2	55.66
	x	6	0.625	5/8	67.82
	x	8	0.188	3/16	24.73
	x	8	0.250	1/4	32.63
	x	8	0.313	5/16	40.35
	x	8	0.375	3/8	47.90
	x	8	0.500	1/2	62.46
	x	8	0.625	5/8	76.33
14	x	4	0.250	1/4	29.23
	x	4	0.313	5/16	36.12
	x	4	0.375	3/8	42.79
	x	4	0.500	1/2	55.66
	x	6	0.250	1/4	32.63
	x	6	0.313	5/16	40.35
	x	6	0.375	3/8	47.90
	x	6	0.500	1/2	62.46

RECTANGULAR TUBING

SIDE 1		SIDE 2	WALL (IN.)	WALL (GA)	LBS. PER. FT.
14	x	6	0.625	5/8	76.33
	x	10	0.250	1/4	39.43
	x	10	0.313	5/16	48.86
	x	10	0.375	3/8	58.10
	x	10	0.500	1/2	76.07
	x	10	0.625	5/8	93.36
16	x	4	0.250	1/4	32.63
	x	4	0.313	5/16	40.35
	x	4	0.375	3/8	47.90
	x	4	0.500	1/2	62.46
	x	8	0.250	1/4	39.43
	x	8	0.313	5/16	48.86
	x	8	0.375	3/8	58.10
	x	8	0.500	1/2	76.07
	x	8	0.625	5/8	93.36
	x	12	0.313	5/16	57.36
	x	12	0.375	3/8	68.31
	x	12	0.500	1/2	89.68
	x	12	0.625	5/8	110.36
	x	12	0.750	3/4	130.30
18	x	6	0.250	1/4	39.43
	x	6	0.313	5/16	48.86
	x	6	0.375	3/8	58.10
	x	6	0.500	1/2	76.07
	x	6	0.625	5/8	93.36

RECTANGULAR TUBING

SIDE 1		SIDE 2	WALL (IN.)	WALL (GA)	LBS. PER. FT.
20	x	4	0.250	1/4	39.43
	x	4	0.313	5/16	48.86
	x	4	0.375	3/8	58.10
	x	4	0.500	1/2	76.07
	x	8	0.313	5/16	57.36
	x	8	0.375	3/8	68.31
	x	8	0.500	1/2	89.68
	x	8	0.625	5/8	110.36
	x	12	0.313	5/16	65.87
	x	12	0.375	3/8	78.52
	x	12	0.500	1/2	103.3
	x	12	0.625	5/8	127.37
	x	12	0.750	3/4	150.80
24	x	12	0.500	1/2	116.90
	x	12	0.625	5/8	144.40
	x	12	0.750	3/4	171.10

TUBING/PIPE

Structural Tubing is a hollow section most commonly constructed from hot rolled metal coils. The coils are slit to the proper width for the section being manufactured and then formed into the final shape needed. Once the size is formed and the seams are welded together the tube is cut to the desired length to make a single piece of tubing. Structural tubing is offered in round, rectangular and square shapes.

Structural tubing is relatively low in cost, has a high strength-to-weight ratio and is easily welded, formed, punched, and drilled. Its hollow shape protects and conceals wires, pipes, moving parts and it can be left exposed. Additionally it can offer a lightweight alternative to solid steel products such as I-Beams and Wide Flange. Triad Metals International offers many different sizes, lengths and specifications for Structural Tubing.

ASTM - 500 - Standard specification for cold-formed welded and seamless carbon steel structural tubing in rounds and shapes. This specification covers cold-formed steel round, square, rectangular, or special shape structural tubing for welded, riveted, or bolted construction of bridges and buildings, and for general structural purposes. Four grades are produced each having a different chemistry and tensile requirement.

Grades B and C, being the most common stock available, can be subjected to most of the usual fabricating operations. Ductility is good. Bends well, flattens, cuts, punches, flares, flanges and welds easily.

SERVICES

LOGISTICAL SERVICES

PLATE PROCESSING

STRUCTURAL PROCESSING

LOCATIONS

LOGISTICAL SERVICES:

Triad Metals offer a complete, customized, transportation solution throughout our network of locations allowing us to deliver steel when we promise.
Trucking: Through our partnership with TMT Transportation, Triad Metals has on-site logistics and trucking to manage our customers' trucking needs. TMT Transportation provides reliable flatbed service throughout the East Coast, Mid-West, and Canada, with hubs and maintenance facilities in Pittsburgh, PA, Petersburg, VA, Columbia City, IN and Oshawa, ON.
Barge: With inbound and outbound waterway direct barge access in Pittsburgh, PA and Oshawa, ON, Triad Metals has the unique ability to manage large amounts of steel from the mills and back out to our customers.
Railroad: Triad Metals has direct rail access in most locations, being served by the major Railroad carriers NS, CSX, BNSF and UP.

PLATE PROCESSING:

Plasma and Oxy Cutters, Beveling, Drilling and Tapping.
- Plasma Cut through 2″ Thick Plate.
- Bevel 45 Degrees through 1-3/8″ Thick Plate.
- Oxy Cut through 8″ Thick Plate
- Part Marking: Pin Stamp or Plasma Etch
- Drilling: 4″ Maximum diameter hole 4″ Maximum plate thickness.
- Tapping ½" thick thru 2″ thick.
- Capable of handling 120″ wide x 60′ long plate

STRUCTURAL PROCESSING:

At Triad Metals, we offer steel processing capabilities, both in house and through our extensive network of preferred vendors, to provide a broad range of services to meet most of your needs.
- Bundle Cutting, Miter & Bevel to 45 degrees
- Holes & Coping
- Plasma Cut through 2″ Thick Plate & Bevel, Oxy Cut through 8″ Thick Plate, Tap and Drill, Pin stamp/Parts etching
- Dip and Galvanizing
- Pile Processing
- Parts and kitting
- And more…

LOCATIONS:

BIRMINGHAM, ALABAMA
2100 Southbridge Pkwy Ste. 210
Birmingham, AL 35209

205-703-9799 Phone
205-201-5289 Fax

COLUMBIA CITY, INDIANA
5755 E Rail Connect Dr
Columbia City, IN 46725

Structural Warehouse
5755 E Rail Connect Dr
Columbia City, IN 46725

Piling Warehouse
2534 E 100 S
Columbia City, IN 46725

877-401-8283 Toll Free
260-244-9500 Phone
260-244-2786 Fax

OSHAWA, ONTARIO
953 Farewell St
Oshawa, ON L1H 6N8, Canada

877-823-3393 Toll Free
905-723-2100 Phone
905-723-1100 Fax

PETERSBURG, VIRGINIA
1951 Bessemer Rd
Petersburg, VA 23805

877-877-7783 Toll Free
804-732-5000 Phone
804-732-5712 Fax

PHILADELPHIA, PENNSYLVANIA
1 Village Rd
Horsham, PA 19044

800-234-1983 Toll Free
215-784-0240 Phone
215-784-0180 Fax

PITTSBURGH, PENNSYLVANIA
Sales Office
3480 Grand Ave
Pittsburgh, PA 15225

Structural Warehouse
3450 Grand Ave
Pittsburgh, PA 15225

Plate, Tube, & Minimill Warehouse
3507 Grand Ave
Pittsburgh, PA 15225

800-355-1140 Toll Free
412-331-7772 Phone
412-771-9316 Fax

CERTIFICATIONS:

- The International Association of Foundation Drilling
- American Institute of Steel Construction
- American Society of Civil Engineers
- Commercial And Government Entity
- Deep Foundations Institute
- Fabricators & Manufacturers Association, International
- Mid-Atlantic Steel Fabricators Association
- New York State Steel Fabricators Association
- PennDOT Bulletin 15 Approved
- Pile Driving Contractors Association
- Southern Association of Steel Fabricators
- Steel Fabricators of New England

TRIAD METALS

BIRMINGHAM, ALABAMA
2100 Southbridge Pkwy Ste. 210
Birmingham, AL 35209

COLUMBIA CITY, INDIANA
5755 E Rail Connect Dr
Columbia City, IN 46725

OSHAWA, ONTARIO
953 Farewell St
Oshawa, ON L1H 6N8, Canada

PETERSBURG, VIRGINIA
1951 Bessemer Rd
Petersburg, VA 23805

PHILADELPHIA, PENNSYLVANIA
1 Village Rd
Horsham, PA 19044

PITTSBURGH, PENNSYLVANIA
3480 Grand Ave
Pittsburgh, PA 15225